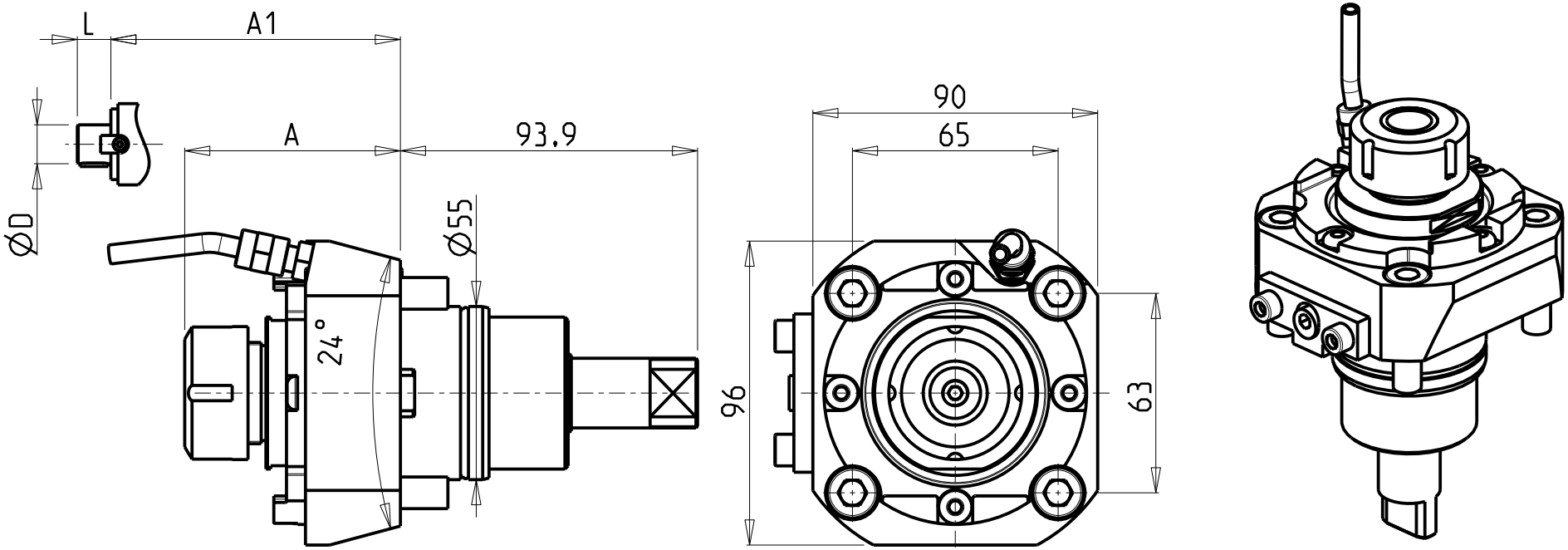

- Chiave inclusa
- Key included
- Schluessel inbegriffen

Cod. MT	Mandrino Spindle Spindel	I	RPM	Coppia Max Max Torque Max Drehmoment	Lubr.interna Coolant through Innenkuehlung	Lubrificazione est. Ext. coolant Aussenkuehlung	A	A1	D	L	CHIAVI NON INCLUSE Keys not included Schluessel nicht einbegriffen	
BGL0230125	ER25	1:1	6000	50Nm	-	X	68.16	-	-	-	CHSTER25	OKU0650004 •
BGL0230132	ER32	1:1	6000	50Nm	-	X	71.16	-	-	-	CHSTER32	OKU0650004 •
BGL0620225	ER25	1:1	6000	50Nm	P=70bar	X	75.16	-	-	-	CHSTER25	OKU0650004 •
BGL0620232	ER32	1:1	6000	50Nm	P=70bar	X	78.16	-	-	-	CHSTER32	OKU0650004 •
BGL0230516	Ø16x17	1:1	6000	50Nm	-	X	-	45	16	17	CH_VTCROCE_M08 •	OKU0650004 •
BGL0230522	Ø22x19	1:1	6000	50Nm	-	X	-	45	22	19	CH_VTCROCE_M10 •	OKU0650004 •
BGL0230527	Ø27x21	1:1	6000	50Nm	-	X	-	47.5	27	21	CH_VTCROCE_M12 •	OKU0650004 •

BIGLIA

MOD: B301/445/470/501(Y-S)/510/545/550/565/620/650/658/1200/446/465/745/765
B750/1250 16 ST. - BV210/315

MODULO MOTORIZZATO RADIALE
Radial driven tool
Radial angetriebenes Werkzeug

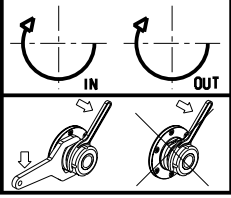

M.T. srl
Via Casino Albini 480
Tel. 0541/956034-957884
Fax 0541/956341
47842 S. GIOVANNI IN M. (RN)
e-mail: mtma@mtmarchetti.com
http://www.mtmarchetti.com

BGL010-1-01

Subject to change without notice.

03/2024