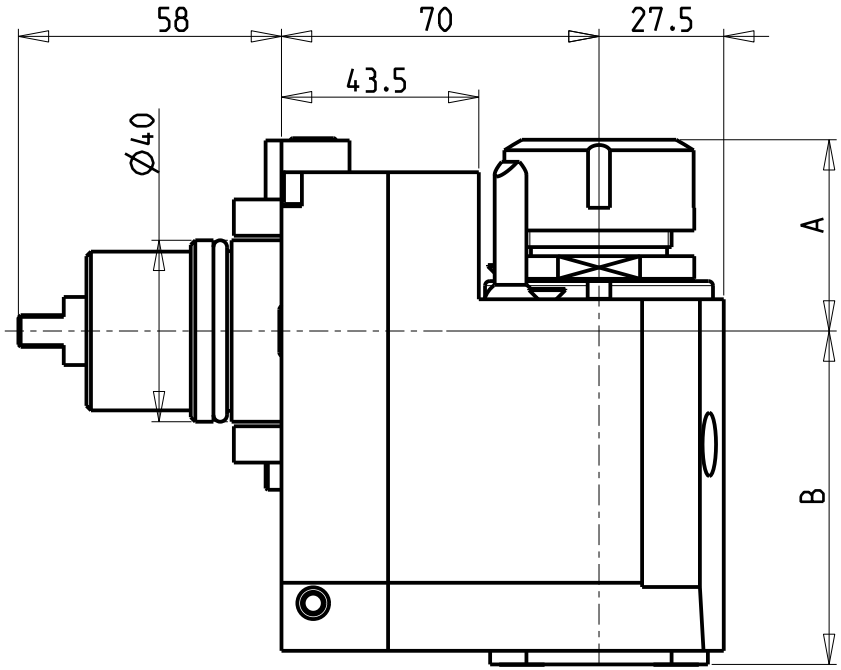

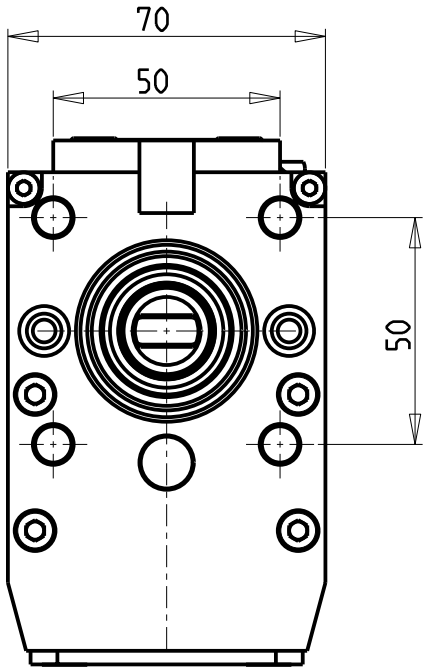

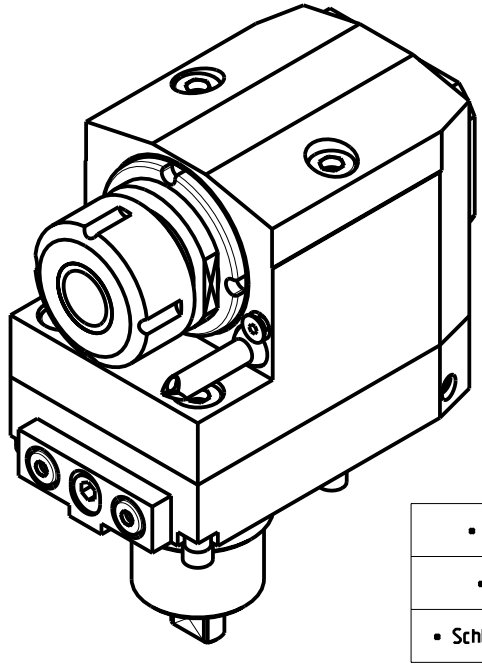

- Chiave inclusa
- Key included
- Schluessel inbegriffen

Cod. MT	Mandrino Spindle Spindel	I	RPM	Coppia Max Max Torque Max Drehmoment	Reversibile lato mandrino/contromandrino Reversible sub/main spindle side Umkehrbare Spindelseite/ Gegenspindelseite	Lubrificazione int. Coolant through Innenkuehlung	Lubrificazione est. Ext. coolant Aussenkuehlung	A	B	CHIAVI NON INCLUSE Keys not included Schluessel nicht einbegriffen		
BGL1090120	ER20	1:2	12000	15Nm	X	-	X	41.16	73.5	CHSTER20		CHUB38
BGL1090220	ER20	1:2	12000	15Nm	X	P=70bar	X	41.16	83.5	CHSTER20		CHUB38
BGL1090125	ER25	1:2	12000	15Nm	X	-	X	42.16	73.5	CHSTER25		CHUB38
BGL1090225	ER25	1:2	12000	15Nm	X	P=70bar	X	42.16	83.5	CHSTER25		CHUB38
BGL1090320	ERA20	1:2	12000	15Nm	X	-	X	24.5	73.5	CHUB38	CHUB22	CHTAER20ZC •
BGL1090420	ERA20	1:2	12000	15Nm	X	P=70bar	X	24.5	83.5	CHUB38	CHUB22	CHTAER20ZC •
BGL1090325	ERA25	1:2	12000	15Nm	X	-	X	28.5	73.5	CHUB38	CHUB27	CHTAER25ZC •
BGL1090425	ERA25	1:2	12000	15Nm	X	P=70bar	X	28.5	83.5	CHUB38	CHUB27	CHTAER25ZC •

BIGLIA

MOD: B436/438 - BMX 45Y2

MODULO MOTORIZZATO ASSIALE ARRETRATO MOLTIPLICATO I=1:2
Axial geard-up I=1:2 rear-set driven tool
Axial angetriebenes Werkzeug uebersetzt I=1:2 zurueckversetzt

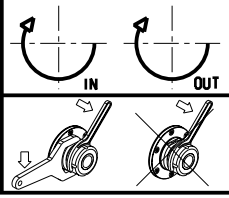

M.T. srl
Via Casino Albini 480
Tel. 0541/956034-957884
Fax 0541/956341
47842 S. GIOVANNI IN M. (RN)
e-mail: mtma@mtmarchetti.com
http://www.mtmarchetti.com

BGL225-2-10

Subject to change without notice.

03/2024