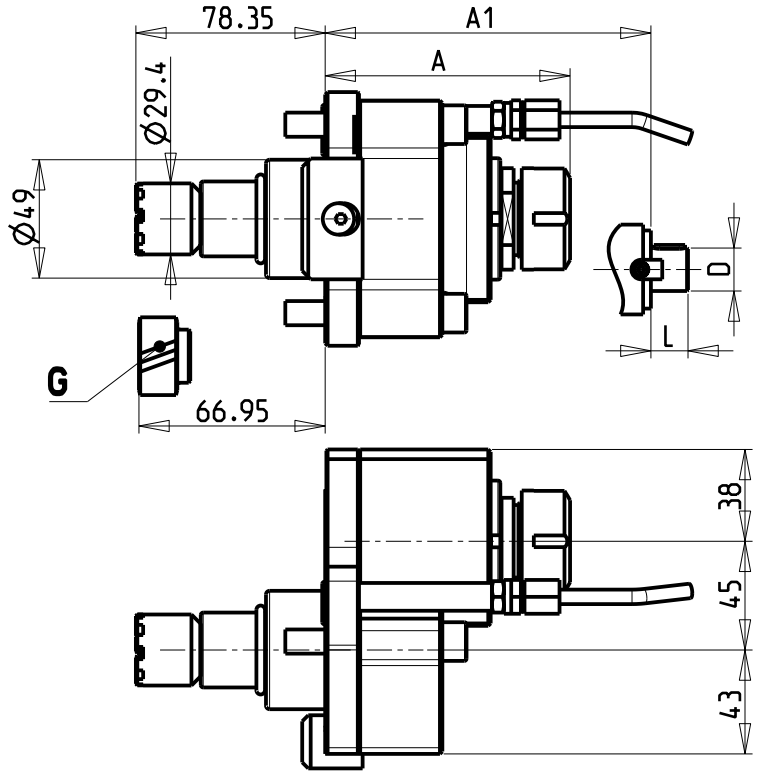


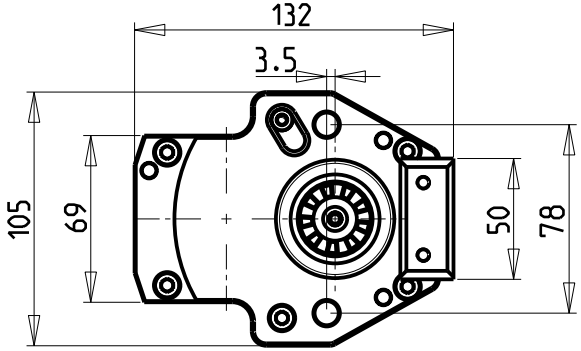


**PER ORDINARE CON INGRANAGGIO**
**AGGIUNGERE "G" AL CODICE IN TABELLA.**
**ESEMPIO: 0090425 DIVENTA 0090425G**

**TO ORDER WITH GEARS**
**ADD A "G" IN THE CODE-CHARTS.**
**EXAMPLE: 0090425 BECOMES 0090425G**

**UM MIT ZAHNRAD ZU BESTELLEN, MUSS MAN**
**DEM TABELLEN-CODE EIN "G" ANHÄNGEN.**
**BEISPIEL: 0090425 WIRD DANN 0090425G**

TORRETTA IDRAULICA
Hydraulic turret
Hydraulik Revolver

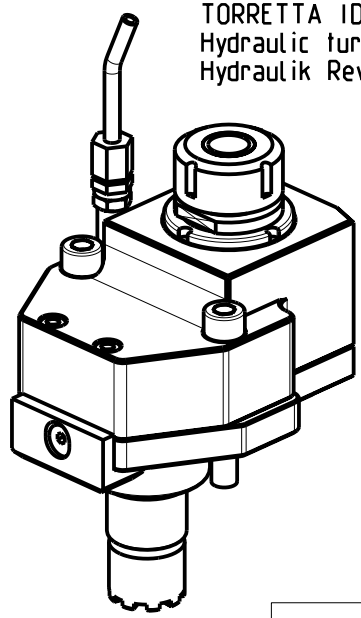

- Chiave inclusa
- Key included
- Schluessel inbegriffen

| Cod. MT | Cod. BIGLIA | Mandrino Spindle Spindel | I | RPM | Coppia Max Max Torque Max Drehmoment | Lubr.esterna Ext. coolant Aussenkuhlung | Presa di moto frontale Front-type drive Frontzapfwelle-Anschluss | Presa di moto con ingranaggio Gear-type drive Getriebezapfwelle-Anschluss | A | A1 | D | L | CHIAVI NON INCLUSE Keys not included Schluessel nicht einbegriffen | |
|---|---|---|---|---|---|---|---|---|---|---|---|---|---|---|
| 0090425 | T134-00005 | ER25 | 1:1 | 3500 | 40Nm | X | X | X | 101.36 | - | - | - | CHSTER25 | CHUB36 |
| 0090332 | T134-00039 | ER32 | 1:1 | 3500 | 40Nm | X | X | X | 115 | - | - | - | CHSTER32 | CHUB36 |
| 0091617 | - | Ø16x17 | 1:1 | 3500 | 40Nm | X | X | X | - | 83 | 16 | 17 | CH_VTCROCE_M08 * | CHUB36 |
| 0092219 | - | Ø22x19 | 1:1 | 3500 | 40Nm | X | X | X | - | 85 | 22 | 19 | CH_VTCROCE_M10 * | CHUB36 |
| 0092721 | 41.32.152.00 | Ø27x21 | 1:1 | 3500 | 40Nm | X | X | X | - | 87 | 27 | 21 | CH_VTCROCE_M12 * | CHUB36 |

BIGLIA (torretta idraulica - Hydraulic turret - Hydraulik Revolver)
MOD: B500 B501 B1000 B56

MODULO MOTORIZZATO ASSIALE
Axial driven tool
Axial angetriebenes Werkzeug

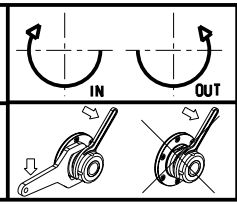


**M.T. srl**
Via Casino Albini 480
Tel. 0541/956034-957884
Fax 0541/956341
47842 S. GIOVANNI IN M. (RN)
e-mail: mtma@mtmarchetti.com
http://www.mtmarchetti.com

BID150-1-10

Subject to change without notice.