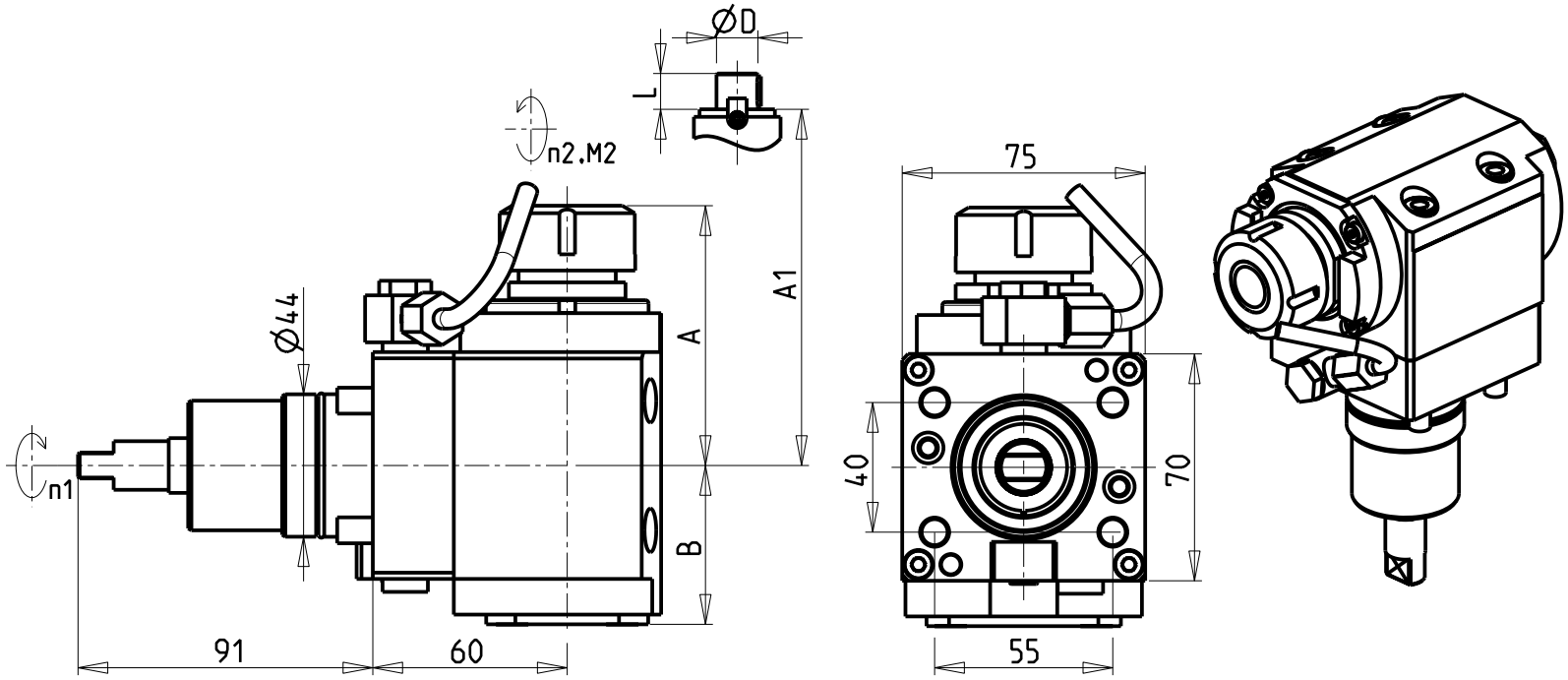

ATTENZIONE - ATTENTION - ACHTUNG

- Per lo smontaggio degli utensili utilizzare sempre la chiave di contrasto come indicato nel manuale d'uso.
- For disassembly of the tools use always the contrast key as mentioned in the user instructions.
- Fuer das Abmontieren der Werkzeuge immer den Gegenschluessel benutzen wie in der Bedienungsanleitung erwaehnt.

• Chiave inclusa
• Key included
• Schluessel inbegriffen

Cod. MT	Mandrino Spindle Spindel	I (n1:n2)	RPM max n2	Coppia Max Max Torque Max Drehmoment M2 [Nm]	Reversibile lato mandrino/contromandrino Reversible sub/main spindle side Umkehrbare Spindelseite/ Gegenspindelseite	Lubrificazione int. Coolant through Innenkuehlung Pmax [bar]	Lubr. esterna Ext. coolant Aussenkuhlung	A	A1	B	D	L	CHIAVI NON INCLUSE Keys not included Schluessel nicht einbegriffen	
NKM0240125	ER25	1:1	6000	35	X	-	X	82.16	-	49	-	-	OKU0290009 •	CHSTER25
NKM0240225	ER25	1:1	6000	35	X	70	X	82.16	-	59	-	-	OKU0290009 •	CHSTER25
NKM0240520	ERA20	1:1	6000	35	X	-	X	69.23	-	49	-	-	OKU0290009 •	CHUB22
NKM0240620	ERA20	1:1	6000	35	X	70	X	69.23	-	59	-	-	OKU0290009 •	CHUB22
NKM0241617	Ø16x17	1:1	6000	35	X	-	X	-	63	49	16	17	CHUB36	CH_VTCROCE_M08 •
NKM0242219	Ø22x19	1:1	6000	35	X	-	X	-	63	49	22	19	CHUB36	CH_VTCROCE_M10 •

CMZ

MOD: TTS 38 - TTS 46 - TTS 52 - TTS 66

MODULO MOTORIZZATO ASSIALE H=60mm
Axial driven tool H=60mm
Axial angetriebenes Werkzeug H=60mm

M.T. srl
Via Casino Albini 480
Tel. 0541/956034-957884
Fax 0541/956341
47842 S. GIOVANNI IN M. (RN)
e-mail: mtma@mtmarchetti.com
http://www.mtmarchetti.com

CMZ150-4-10

Subject to change without notice.

03/2025