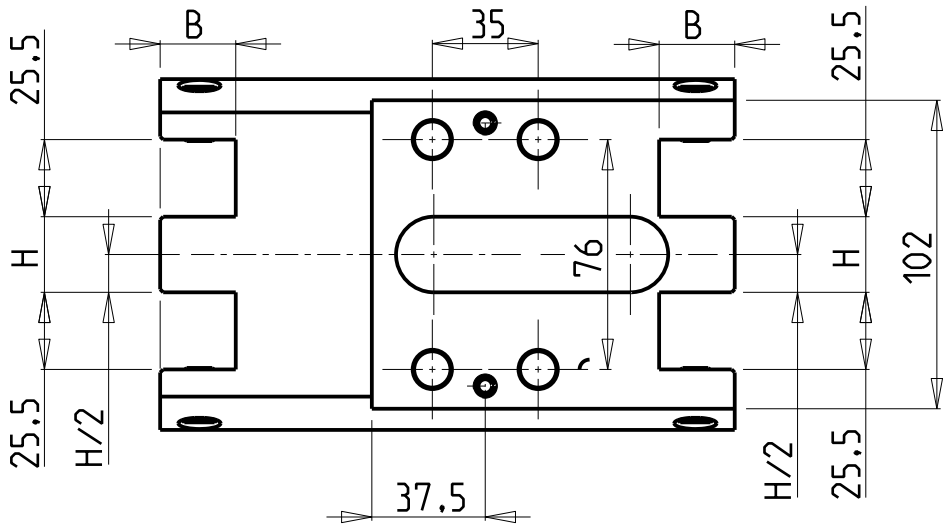

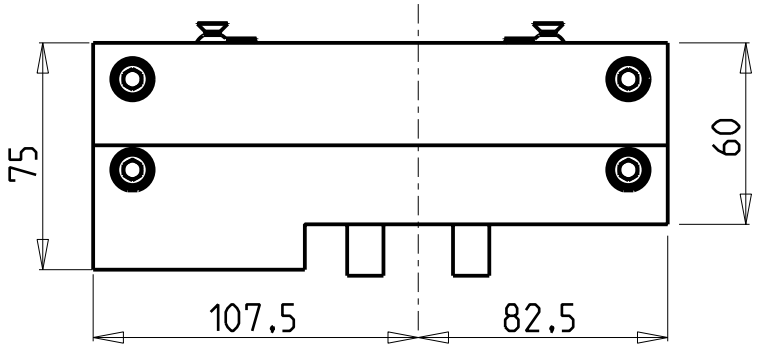

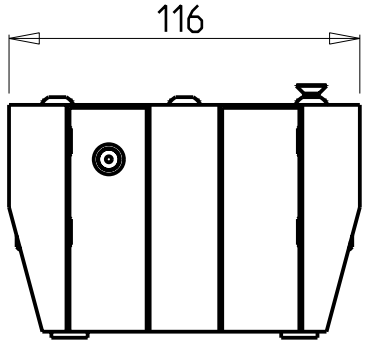

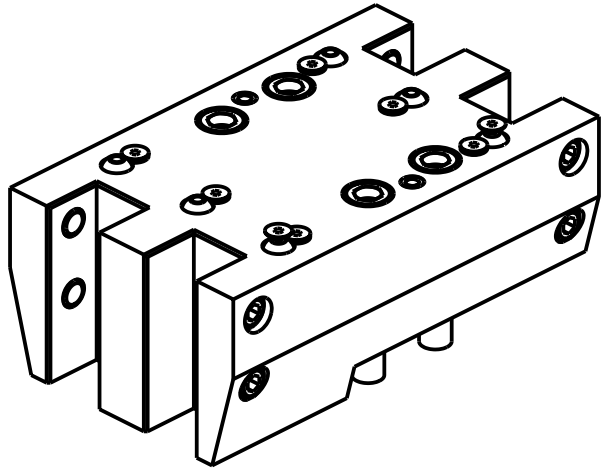

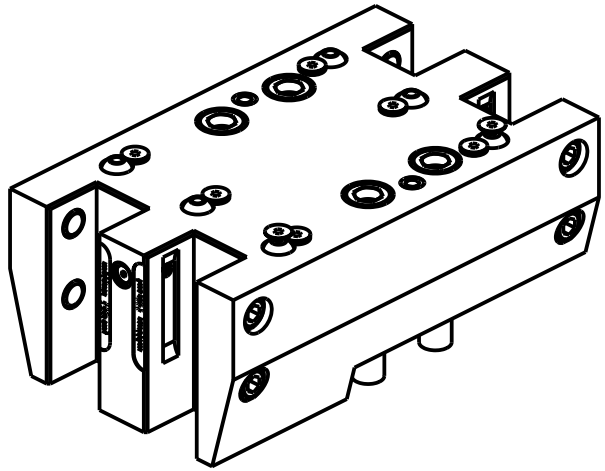

MSL0332510

Cod. MT	N°Utensili N°Tools N°Werkzeuge	Lubrificazione int. Coolant through Innenkuehlung	Lubrificazione est. Ext. coolant Aussenkuehlung	Misure Dimensions Masse	H	B
MSL0332500	4	-	X	mm	25	25
MSL0332510	4	P=70bar	X	mm	25	25

CMZ

MOD:TA15-20-25-30YS - TC15-20-25-30-35YS - TD15-20-25-30-35-45-55YS

PORTAUTENSILE RADIALE DOPPIO SOVRAPPOSTO QD=25mm
Radial double side twin static tool QD=25mm
Radial Doppel-Werkzeughalter ueberlagert QD=25mm

M.T. srl
Via Casino Albini 480
Tel. 0541/956034-957884
Fax 0541/956341
47842 S. GIOVANNI IN M. (RN)
e-mail: mtma@mtmarchetti.com
http://www.mtmarchetti.com

CMZ460-2-00

Subject to change without notice.