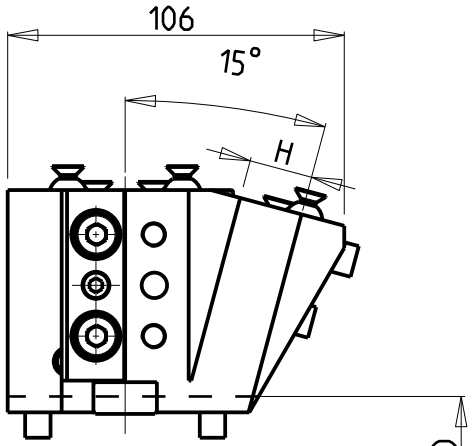

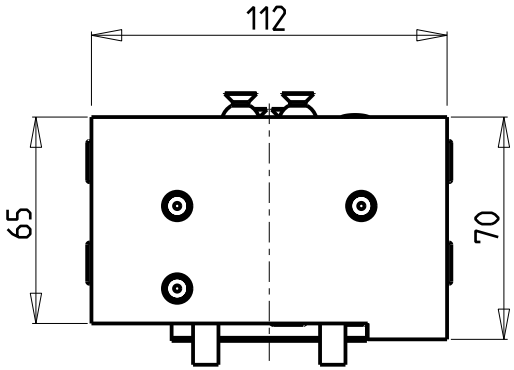

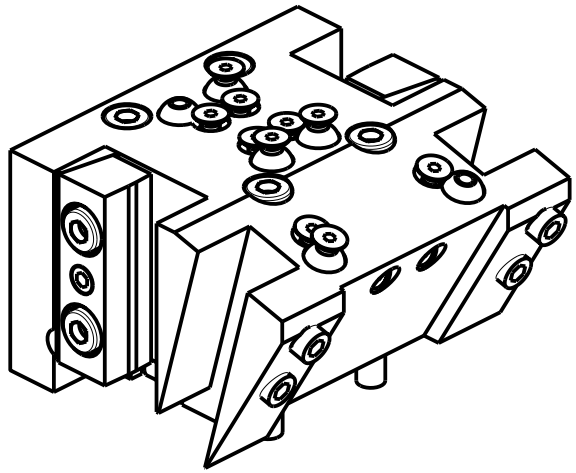

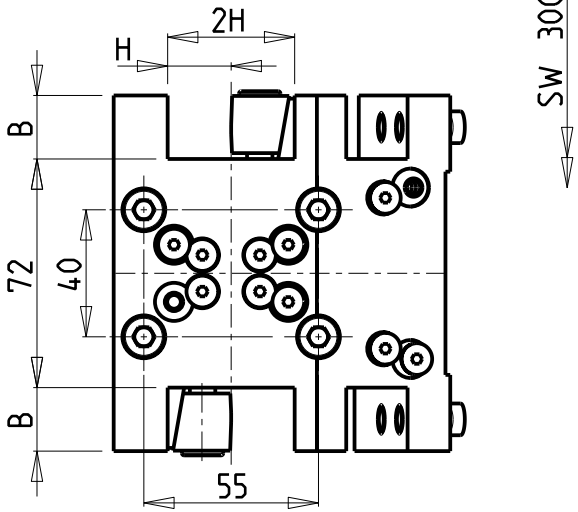

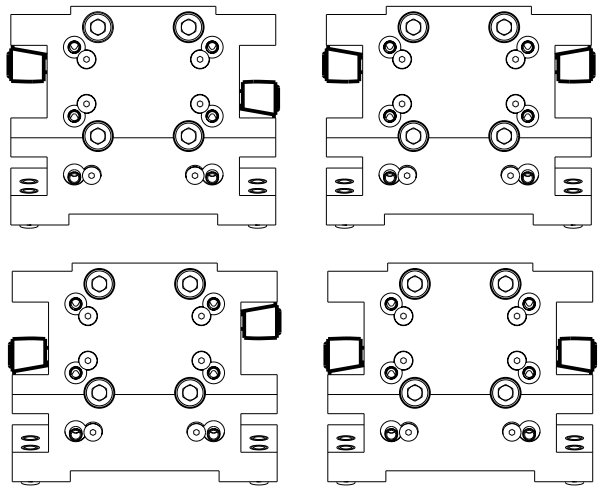

Cod. MT	N°Utensili N°Tools N°Werkzeuge	Misure Dimensions Masse	B	H
NKM0452000	4	mm	20	20

CMZ

MOD: TTS 38 - TTS 46 - TTS 52 - TTS 66

PORTAUTENSILE RADIALE MULTIPLO QD=20mm
Radial multiple static tool QD=20mm
Radial Mehrfach-Halter QD=20mm

M.T. srl
Via Casino Albini 480
Tel. 0541/956034-957884
Fax 0541/956341
47842 S. GIOVANNI IN M. (RN)
e-mail: mtma@mtmarchetti.com
http://www.mtmarchetti.com

CMZ470-4-00

Subject to change without notice.

03/2025