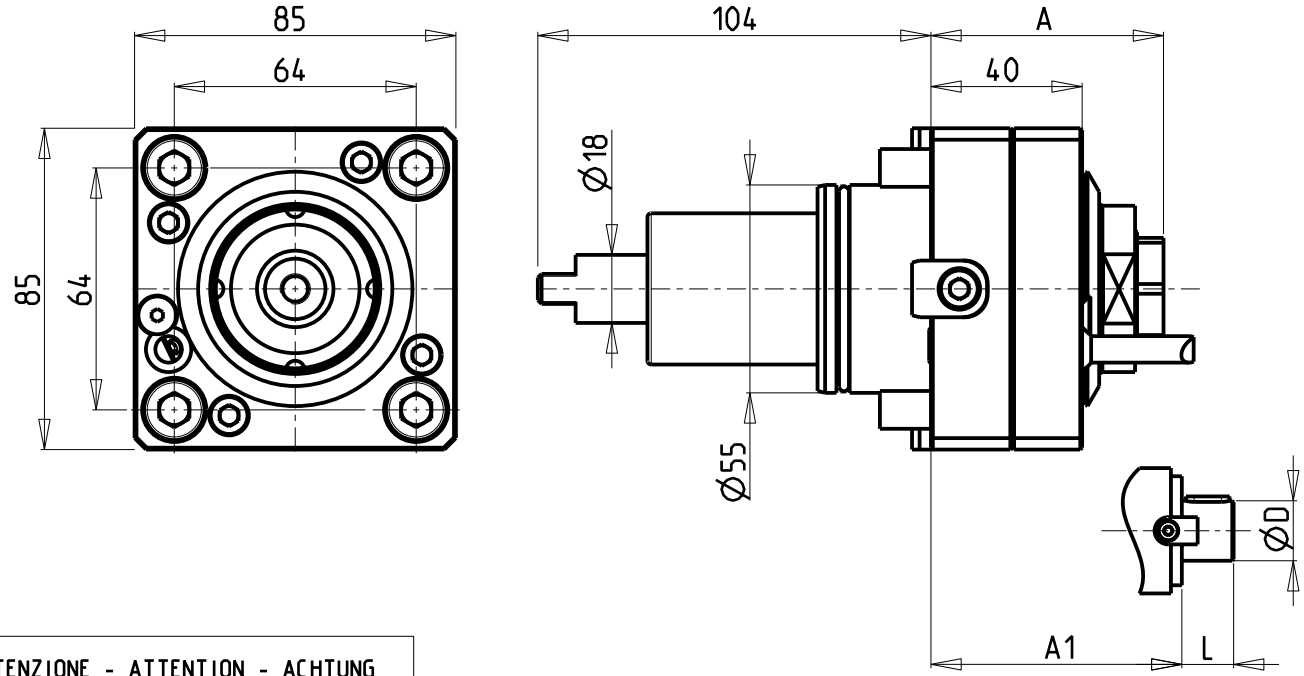

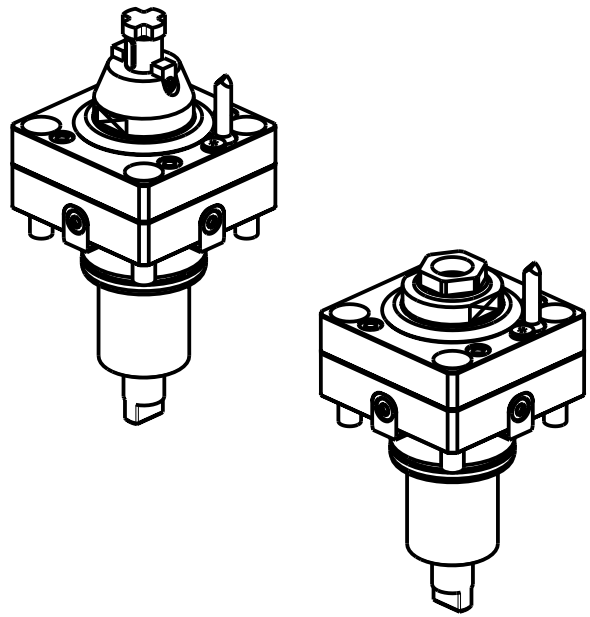

ATTENZIONE - ATTENTION - ACHTUNG
- FINO AD ESAURIMENTO SCORTE
- clearance sale
- solange vorrat

• Chiave inclusa
• Key included
• Schluessel inbegriffen

Cod. MT	Cod. EPPINGER	Mandrino Spindle Spindel	I	RPM	Coppia Max Max Torque Max Drehmoment	Lubrificazione int. Coolant through Innenkuehlung	Lubrificazione est. Ext. coolant Aussenkuehlung	A	A1	D	L	CHIAVI NON INCLUSE Keys not included Schluessel nicht einbegriffen	
0271525	7.070.679	ER A 25	1:1	6000	50Nm	-	X	61.53	-	-	-	CHUB27	CHUB40 o 0270018
0271025	-	ER A 25	1:1	6000	50Nm	P=30bar	X	61.53	-	-	-	CHUB27	CHUB40 o 0270018
0271617	-	Ø16x17	1:1	6000	50Nm	-	X	-	70	16	17	CH_VTCROCE_M08 •	CHUB40 o 0270018
0272219	-	Ø22x19	1:1	6000	50Nm	-	X	-	70	22	19	CH_VTCROCE_M10 •	CHUB40 o 0270018

DN SOLUTIONS (DOOSAN) BMT 55

MOD: PUMA 230-240M/MS-280LM - PUMA 1500-2000-2100-2500-2600M/MS/Y/SY - LINX 300 M - PUMA 2100-2600Y/SY 16ST. - PUMA H250TM - PUMA TW2600 10ST. - PUMA DNT2100-2600M (BMT55)
PUMA TT1500-1800-2100MS/SY/SYY - PUMA TL2000-2500 (M) - MX1600/2100ST 12ST. - SMX2100ST - PUMA GT2100-2600 M - PUMA QL200HM - LYNX 2600 Y/SY 12ST./16ST.

MODULO MOTORIZZATO RADIALE
Radial driven tool
Radial angetriebenes Werkzeug

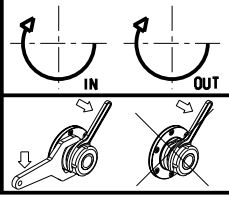

M.T. srl
Via Casino Albini 480
Tel. 0541/956034-957884
Fax 0541/956341
47842 S. GIOVANNI IN M. (RN)
e-mail: mtma@mtmarchetti.com
http://www.mtmarchetti.com

DW0010-2-00

Subject to change without notice.

09/2024