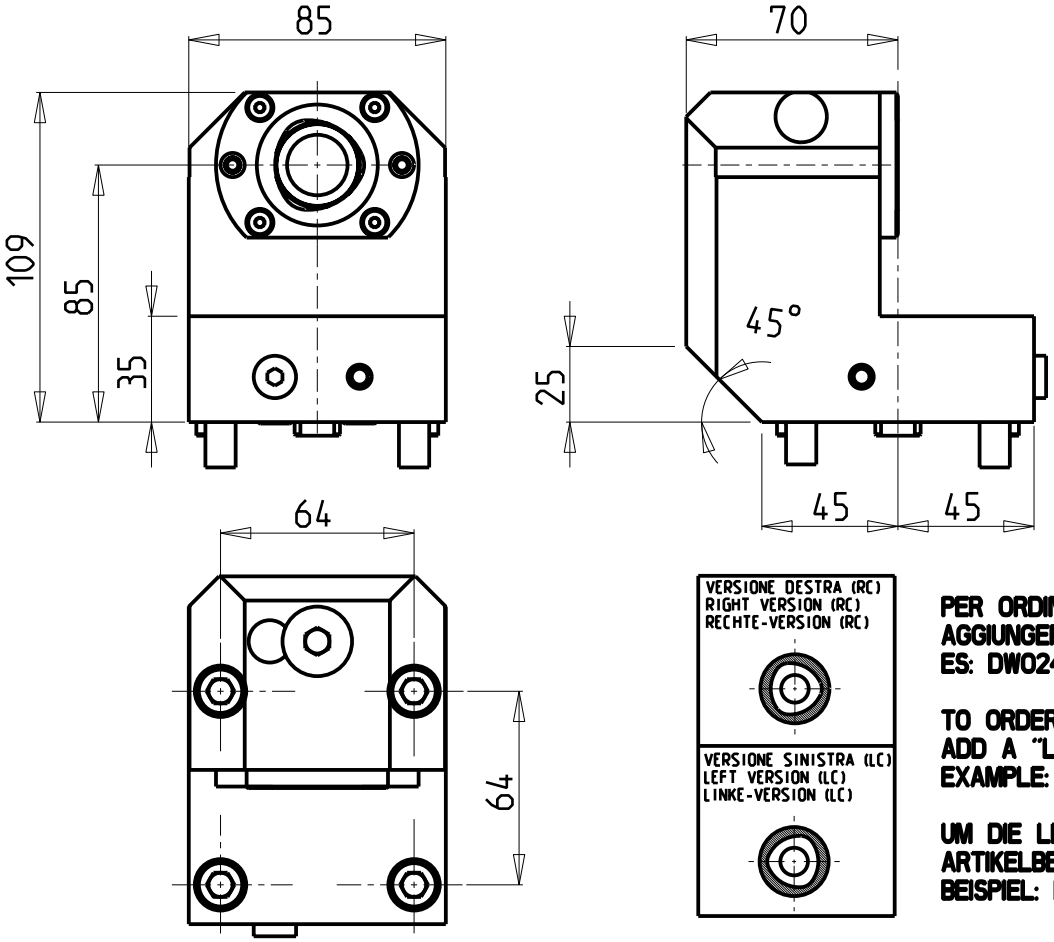

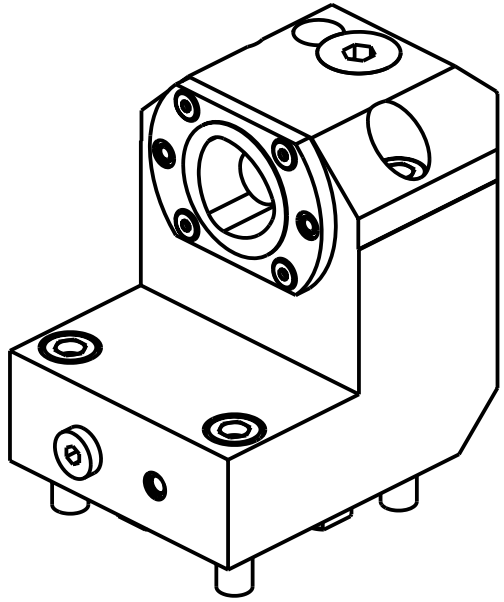

PER ORDINARE LA VERSIONE SX
AGGIUNGERE "LC" AL CODICE IN TABELLA.
ES: DW02434010 DIVENTA DW02434010LC

TO ORDER LEFT VERSION
ADD A "LC" IN THE CODE-CHARTS.
EXAMPLE: DW02434010 BECOMES DW02434010LC

UM DIE LINKE-VERSION ZU BESTELLEN, BEI DER
ARTIKELBEZEICHNUNG "LC" HINZUFUEGEN.
BEISPIEL: DW02434010 WIRD DANN DW02434010LC

Cod. MT	Lubrificazione int. Coolant through Innenkuehlung	Lubrificazione est. Ext. coolant Aussenkuehlung	Reversibile lato mandrino/contromandrino Reversible sub/main spindle side Umkehrbare Spindelseite/ Gegenspindelseite	TAGLIA Size Masse
DW02434010	X	X	X	C4

DN SOLUTIONS (DOOSAN) BMT 55

MOD: PUMA 230-240M/MS-280LM - PUMA 1500-2000-2100-2500-2600M/MS/Y/SY - LINX 300 M - PUMA 2100-2600Y/SY 16ST. - PUMA TT1500-1800-2100MS/SY/SYY PUMA TL2000-2500 (M) - MX1600/2100ST 12ST. - SMX2100ST - PUMA H250TM - PUMA QL200HM - LYNX 2600 Y/SY 12ST./16ST. - PUMA DNT2100-2600M (BMT55)

PORTAUTENSILE ASSIALE SINGOLO ARRETRATO MT CAPTO
Axial rear-set boring single static tool MT CAPTO
Axial Single-Werkzeughalter zurueckversetzt MT CAPTO

M.T. srl
Via Casino Albini 480
Tel. 0541/956034-957884
Fax 0541/956341
47842 S. GIOVANNI IN M. (RN)
e-mail: mtma@mtmarchetti.com
http://www.mtmarchetti.com

DW0555-B-40

Subject to change without notice.

09/2024