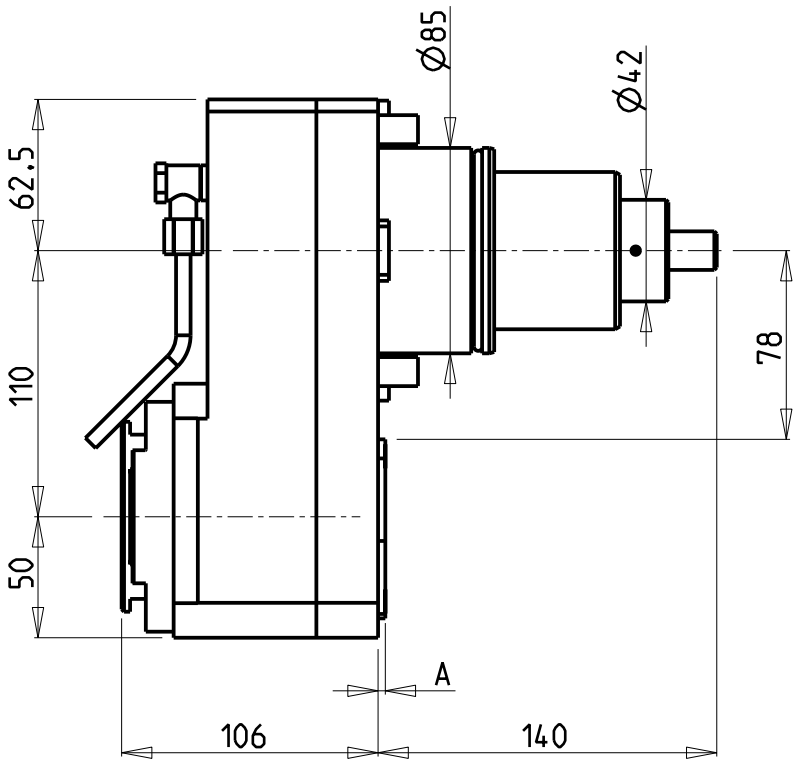


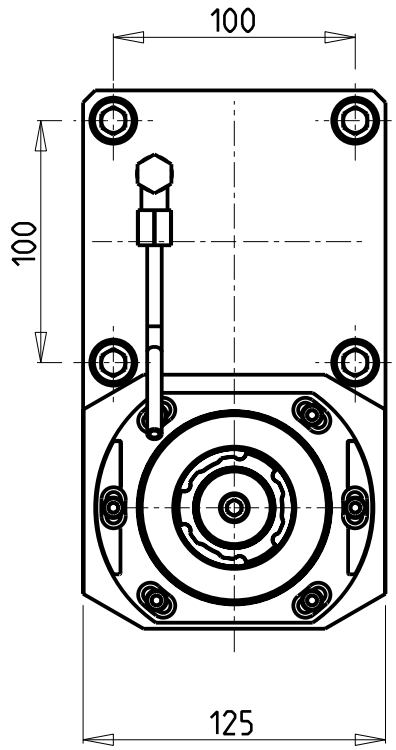


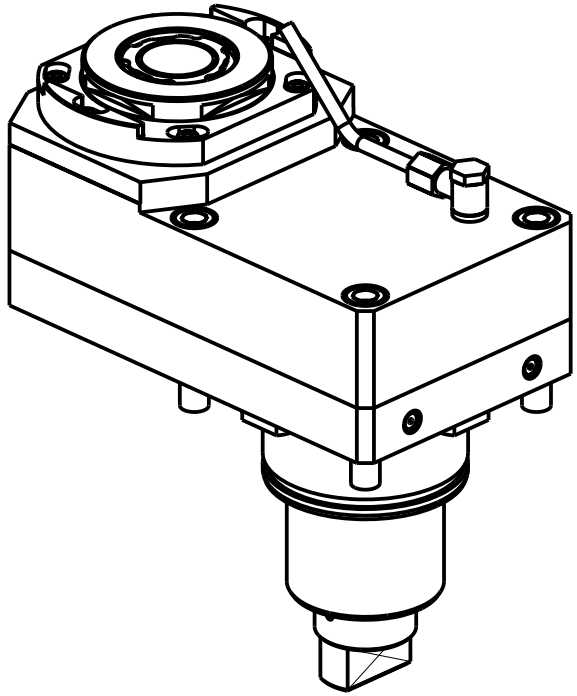

| Cod. MT | Mandrino Spindle Spindel | I | RPM | Coppia Max Max Torque Max Drehmoment | Lubr.interna Coolant through Innenkuehlung | Lubr. esterna Ext. coolant Aussenkuehlung | A | CHIAVI NON INCLUSE Keys not included Schluessel nicht einbegriffen | | |
|---|---|---|---|---|---|---|---|---|---|---|
| DW02122140 | ERA40 | 2:1 | 1500 | 270Nm | - | X | 3 | CHUB36 | NZL0010023 • | CHTAER40ZC • |
| DW02122240 | ERA40 | 2:1 | 1500 | 270Nm | P=70bar | X | 14 | CHUB36 | NZL0010023 • | CHTAER40ZC • |

| |
|---|
| • Chiave inclusa |
| • Key included |
| • Schluessel inbegriffen |

EMCO

MOD: MAXXTURN 200 (BMT85)

MODULO MOTORIZZATO RADIALE RIDOTTO I=2:1 DISASSATO IN Z 110mm
Radial geared-down I=2:1 driven tool re-directed in Z by 110mm
Radial angetriebenes Werkzeug untersetzt I=2:1 achsversetzt in Z um 110mm

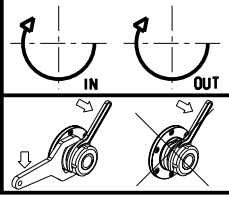


**M.T. srl**
Via Casino Albini 480
Tel. 0541/956034-957884
Fax 0541/956341
47842 S. GIOVANNI IN M. (RN)
e-mail: mtma@mtmarchetti.com
http://www.mtmarchetti.com

EMC030-4-20

Subject to change without notice.

03/2024