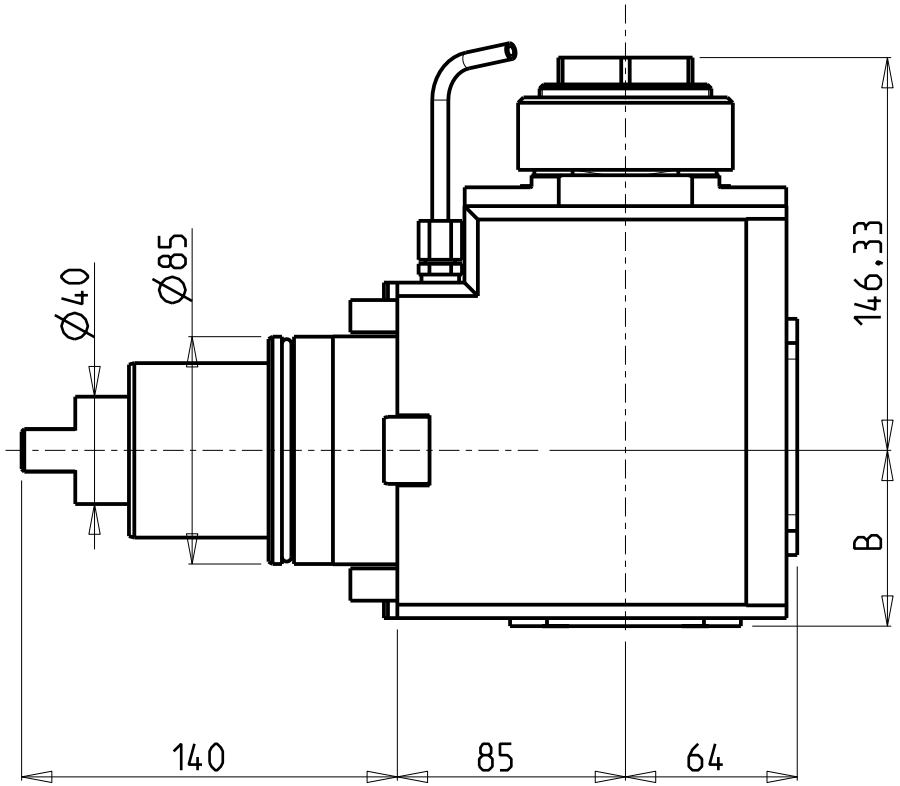

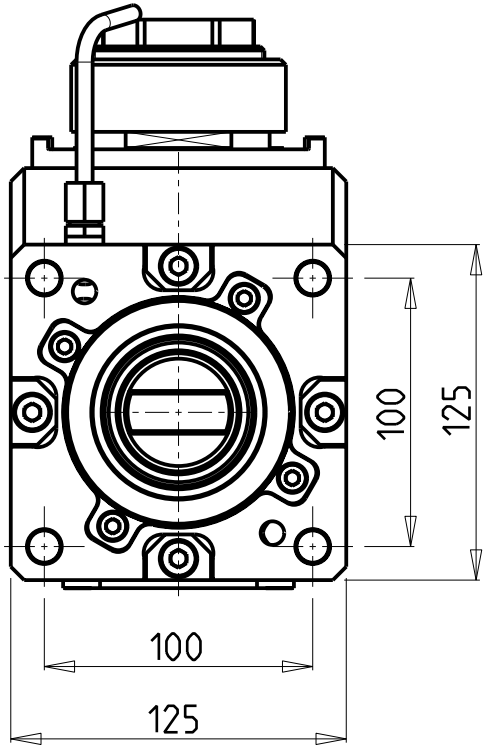

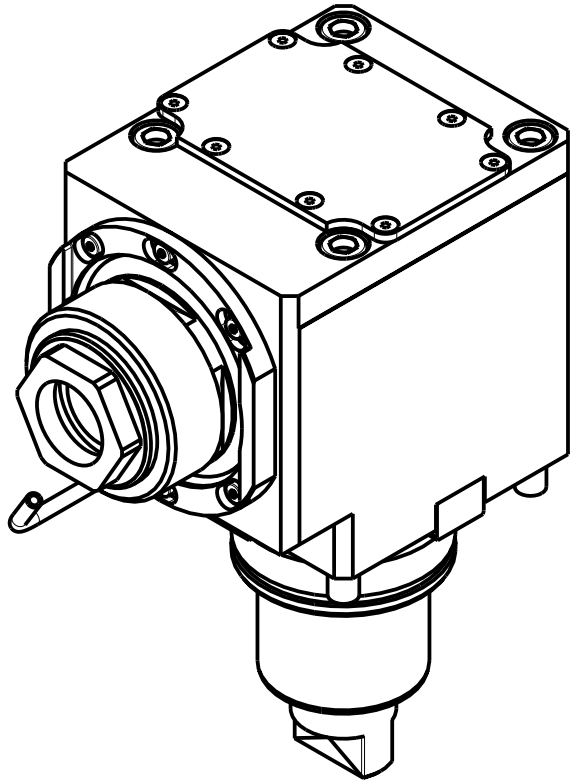

Cod. MT	Mandrino Spindle Spindel	I	RPM	Coppia Max Max Torque Max Drehmoment	Reversibile lato mandrino/contromandrino Reversible sub/main spindle side Umkehrbare Spindelseite/ Gegenspindelseite	Lubrificazione int. Coolant through Innenkuhlung	Lubrificazione est. Ext. coolant Aussenkuhlung	B	CHIAVI NON INCLUSE Keys not included Schluessel nicht einbegriffen	
DW00460150	ER A 50	2:1	1500	300Nm	X		X	65.5	CHUB50	NZL0010023 •
DW00460250	ER A 50	2:1	1500	300Nm	X	P=70bar	X	82	CHUB50	NZL0010023 •

• Chiave inclusa
• Key included
• Schluessel inbegriffen

EMCO

MOD: MAXXTURN 200 (BMT85)

MODULO MOTORIZZATO ASSIALE RIDOTTO I=2:1 H=85mm
Axial geared-down I=2:1 driven tool H=85mm
Axial angetriebenes Werkzeug untersetzt I=2:1 H=85mm

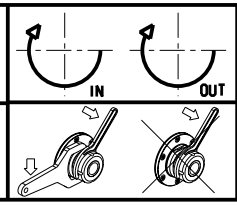

M.T. srl
Via Casino Albini 480
Tel. 0541/956034-957884
Fax 0541/956341
47842 S. GIOVANNI IN M. (RN)
e-mail: mtma@mtmarchetti.com
http://www.mtmarchetti.com

EMC 190-4-10

Subject to change without notice.

03/2024