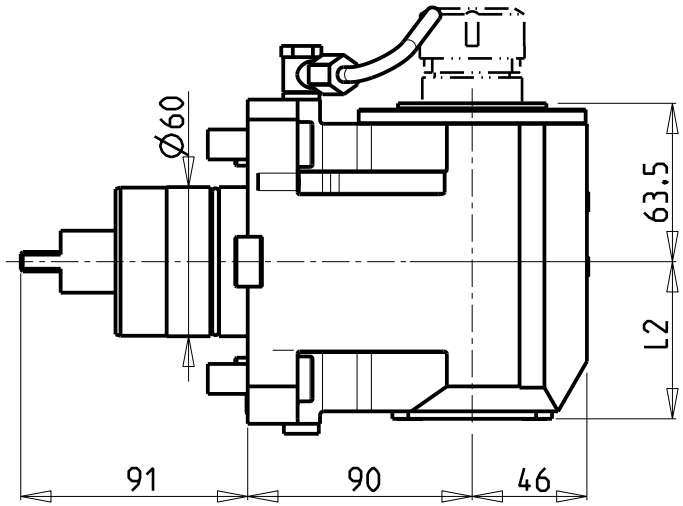

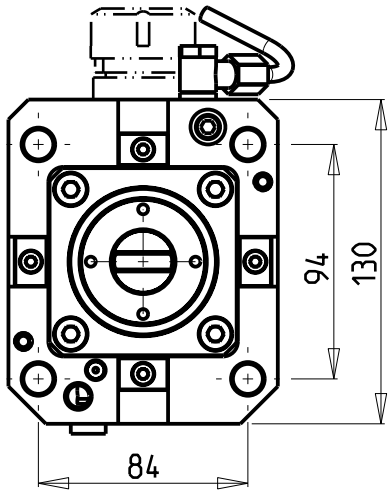

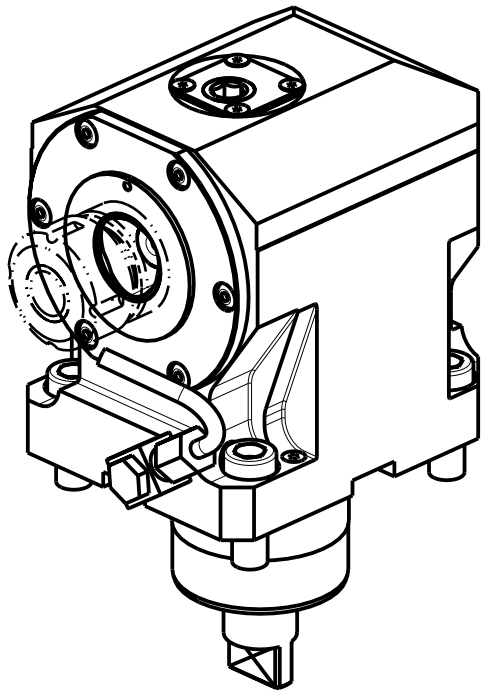

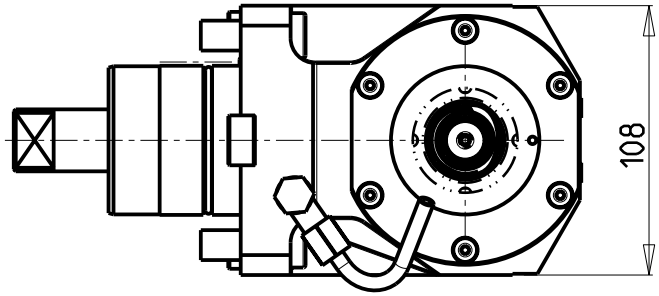

Cod. MT	TAGLIA Size Masse	I	RPM	Coppia Max Max Torque Max Drehmoment	Reversibile lato mandrino/contromandrino Reversible sub/main spindle side Umkehrbare Spindelseite/ Gegenspindelseite	Lubr.interna Coolant through Innenkuehlung	Lubr.esterna Ext. coolant Aussenkuehlung	L2
GDW0360140	C4	1:1	6000	70Nm	X		X	63
GDW0360240	C4	1:1	6000	70Nm	X	P=70bar	X	75.5
GDW0360150	C5	1:1	6000	70Nm	X		X	63
GDW0360250	C5	1:1	6000	70Nm	X	P=70bar	X	75.5

GOODWAY

MOD: GS2000/2600/2800/3000/3300/3600/4000 12ST. - GMS2000 12ST.

MODULO MOTORIZZATO ASSIALE MT CAPTO
Axial driven tool MT CAPTO
Axial angetriebenes Werkzeug MT CAPTO

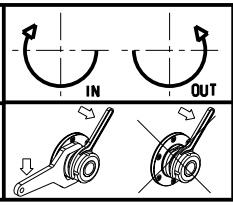

M.T. srl
Via Casino Albini 480
Tel. 0541/956034-957884
Fax 0541/956341
47842 S. GIOVANNI IN M. (RN)
e-mail: mtma@mtmarchetti.com
http://www.mtmarchetti.com

GDW 150-A-40

Subject to change without notice.

03/2024