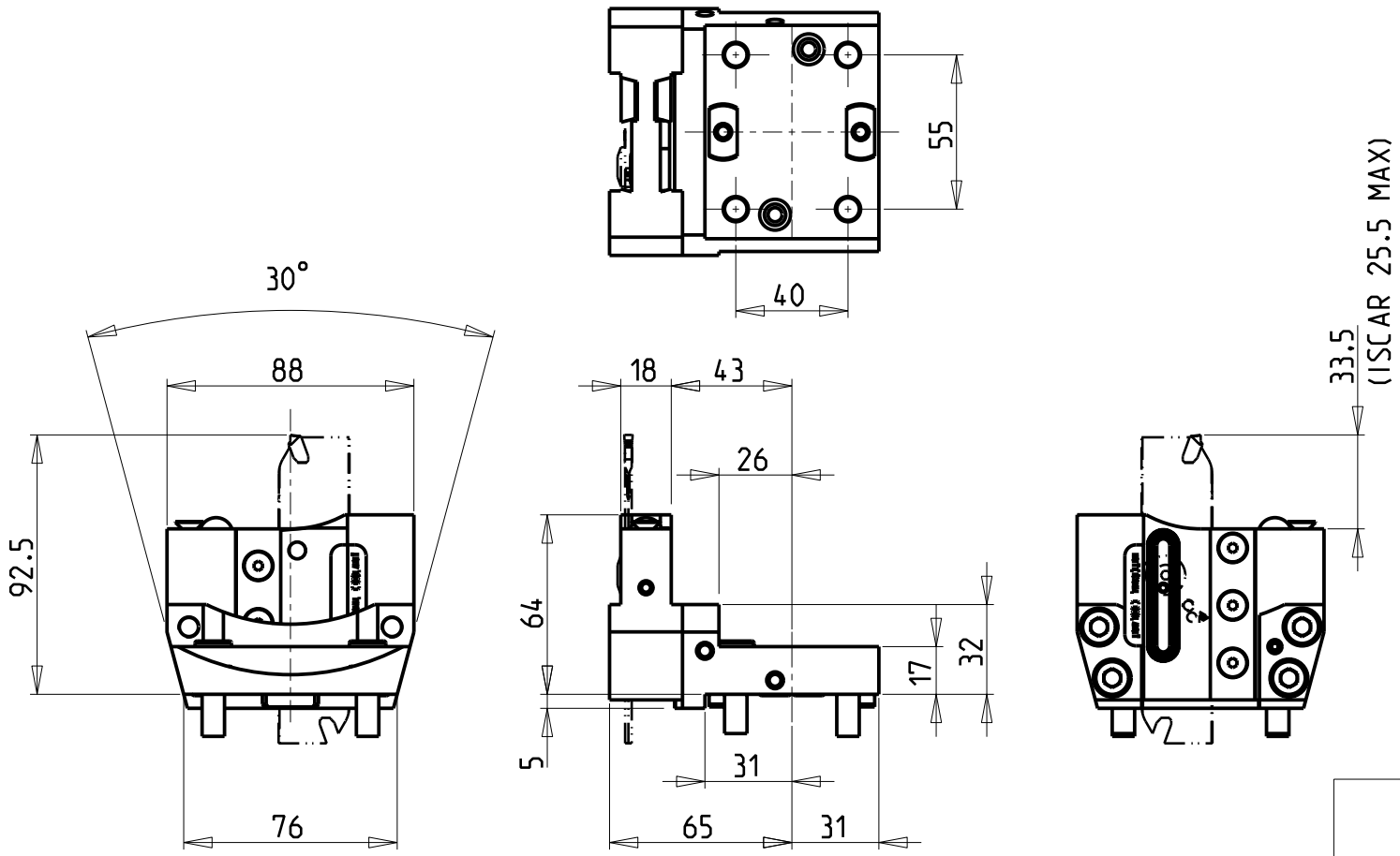

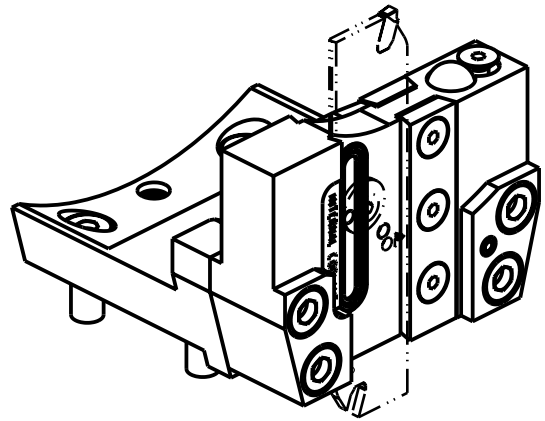

KIT LAME NON INCLUSI (OPZIONALI)
BLADES NOT SUPPLIED WITH (OPTIONAL)
KLINGEN NICHT INBEGRIFFEN (OPTIONAL)

- LAMA-BLADE-KLINGE SANDVIK H=26 sp.3 cod. QD_NN2G36C21A
  +INSERTI-INSERTS-EINLAGEN cod. QD_NG_0300_0002_CM_1145 (10 pz.)

- LAMA-BLADE-KLINGE ISCAR H=26 sp.3 cod. SGFH_26K_3
  +INSERTI-INSERTS-EINLAGEN cod. 6011365 (10pz.)

Cod. MT	N°Utensili N°Tools N°Werkzeuge	Reversibile lato mandrino/contromandrino Reversible sub/main spindle side Umkehrbare Spindelseite/ Gegenspindelseite	Lubr.esterna Ext. coolant Aussenkuehlung	Lubrificazione int. Coolant through Innenkuehlung Pmax [bar]
NKM2150226	1	X	X	70

POSSIBILITA' DI LAVORO M3/M4
OPTION OF M3/M4 WORKING
ARBEITSMÖGLICHKEIT M3/M4

GOODWAY

MOD: GTZ-1500

PORTAUTENSILE RADIALE PER LAMA CON LUBRIFICAZIONE INTERNA
Radial blade holder with internal coolant
Radial Abstechhalter mit Innenkuehlung

M.T. srl
Via Casino Albini 480
Tel. 0541/956034-957884
Fax 0541/956341
47842 S. GIOVANNI IN M. (RN)
e-mail: mtma@mtmarchetti.com
http://www.mtmarchetti.com

GDW513-6-05

Subject to change without notice.

03/2025