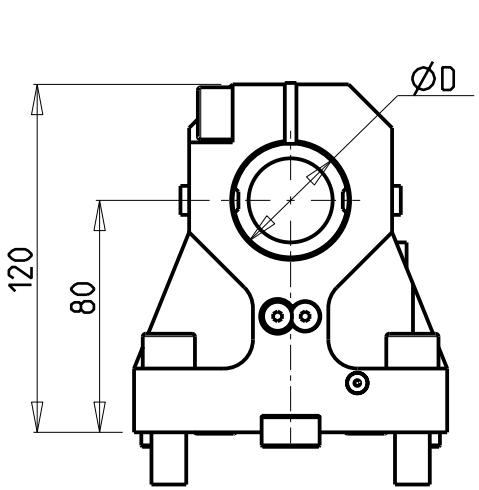

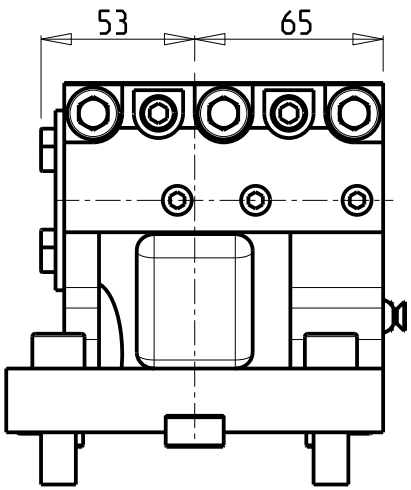

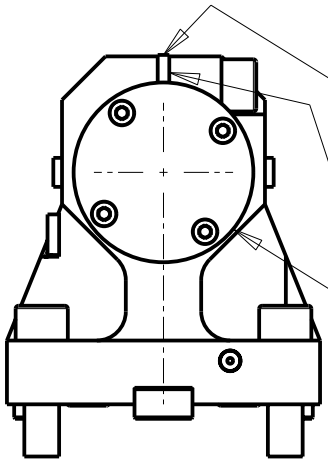

SOLO GUARNIZIONE (OPZIONALE)
ONLY SEAL (OPTIONAL)
NUR DICHTUNG (OPTIONAL)
cod. 0520013

KIT ADDUZIONE INTERNA (OPZIONALE)
KIT FOR INTERNAL COOLANT (OPTIONAL)
KIT FUER INTERNE KUEHLMITTELZUFUHR (OPTIONAL)
Ø40 cod. KIT1003003
Ø1 1/2" cod. KIT1003004

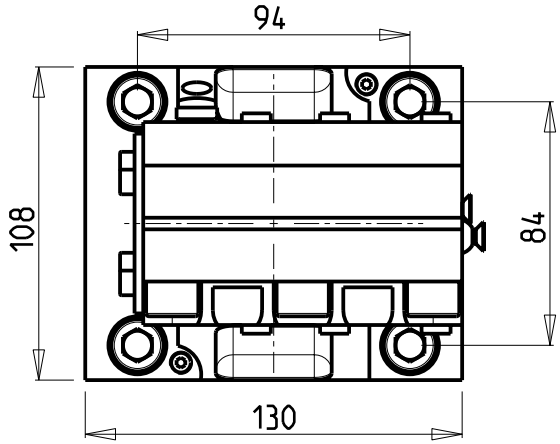

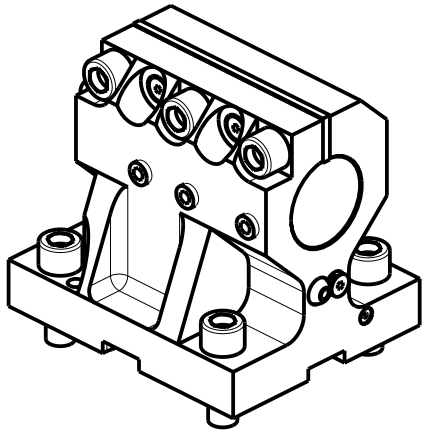

Cod. MT	N°Utensili N°Tools N°Werkzeuge	Reversibile lato mandrino/contromandrino Reversible sub/main spindle side Umkehrbare Spindelseite/ Gegenspindelseite	Lubrificazione int. opzionale Coolant through optional Innenkuhlung Optional	Lubrificazione est. Ext. coolant Aussenkuhlung	Misure Dimensions Masse	D.
GDW0124000	1	X	X	X	mm	40
GDW0123810	1	X	X	X	Inch	1 1/2"

PER BOCCOLE DI RIDUZIONE VEDI PAG. TBL150-1-00
FOR REDUCING BUSHINGS SEE PAGE TBL150-1-00
FUR REDUZIERBUCHSE SIEHE SEITE TBL150-1-00

GOODWAY

MOD: GS2000/2600/2800/3000/3300/3600/4000 12ST. - GMS2000 12ST.

PORTAUTENSILE ASSIALE PER BARENO Ø40mm / Ø1 1/2" H=80mm
Axial single boring bar holder Ø40mm / Ø1 1/2" H=80mm
Axial Bohrhalter Ø40mm / Ø1 1/2" H=80mm

M.T. srl
Via Casino Albini 480
Tel. 0541/956034-957884
Fax 0541/956341
47842 S. GIOVANNI IN M. (RN)
e-mail: mtma@mtmarchetti.com
http://www.mtmarchetti.com

GDW630-1-20

Subject to change without notice.