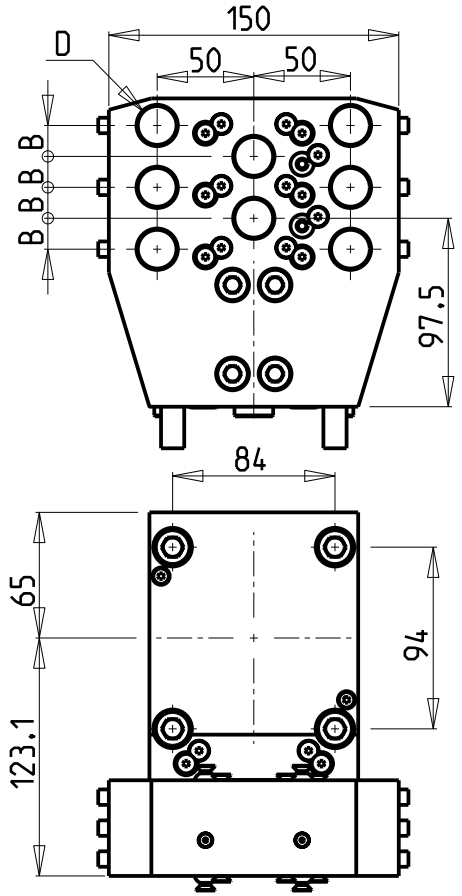

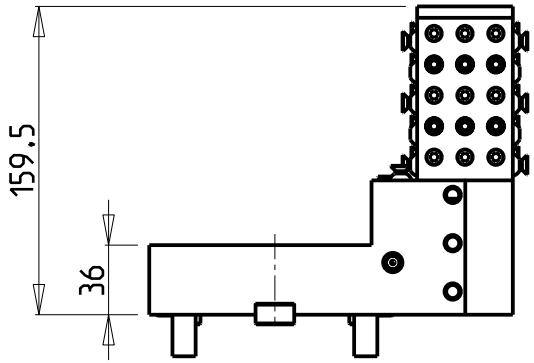

DOTAZIONI - SUPPLIED WITH - AUSSTATTUNG	
mm	N°5 Boccole - Bushings - Buchsen Ø16-12-10-8-6 N°1 ER16 Portapinza - Collet holder - Zangenhalter N°1 ER25 Portapinza - Collet holder - Zangenhalter
inch	N°3 Boccole - Bushings - Buchsen Ø1/2"-3/8"-1/4" N°1 ER16 Portapinza - Collet holder - Zangenhalter N°1 ER25 Portapinza - Collet holder - Zangenhalter

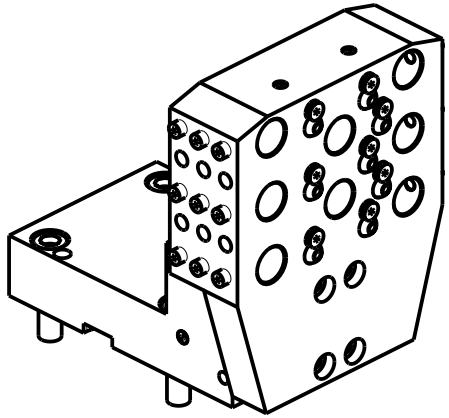

Cod. MT	N°Utensili N°Tools N°Werkzeuge	Reversibile lato mandrino/contromandrino Reversible sub/main spindle side Umkehrbare Spindelseite/ Gegenspindelseite	Lubrificazione est. Ext. coolant Aussenkuehlung	Misure Dimensions Masse	D	B	H
GDW0342000	8	X	X	mm	20	16	50
GDW0341905	8	X	X	Inch	3/4"	5/8"	2"

GOODWAY

MOD: GS2000/2600/2800/3000/3300/3600/4000 12ST.

PORTAUTENSILE ASSIALE PER BARENO 8 POSIZIONI Ø20mm / Ø3/4"
Axial 8 position boring bar holder Ø20mm / Ø3/4"
Axial Bohrhalter 8 Positionen Ø20mm / Ø3/4"

M.T. srl
Via Casino Albini 480
Tel. 0541/956034-957884
Fax 0541/956341
47842 S. GIOVANNI IN M. (RN)
e-mail: mtma@mtmarchetti.com
http://www.mtmarchetti.com

GDW933-1-00

Subject to change without notice.

03/2024