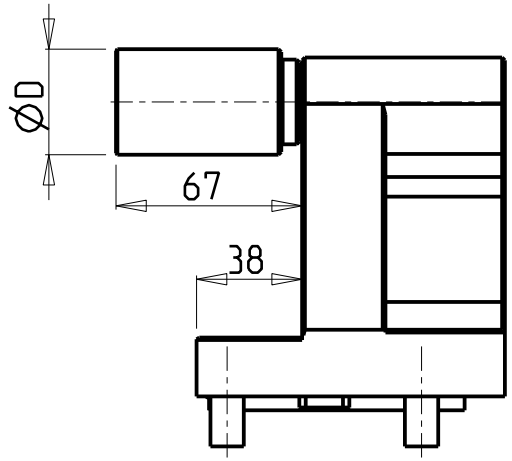

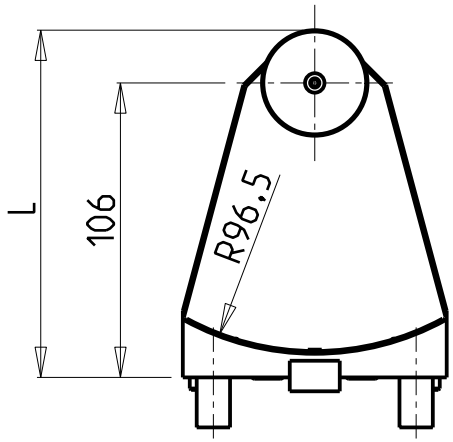

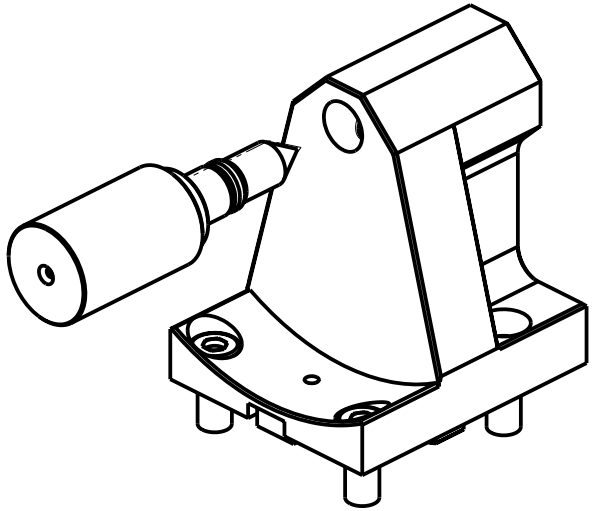

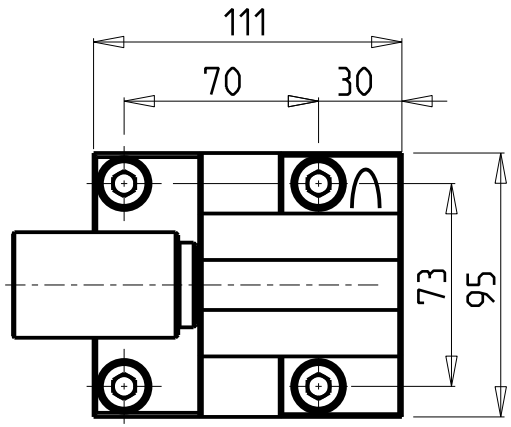

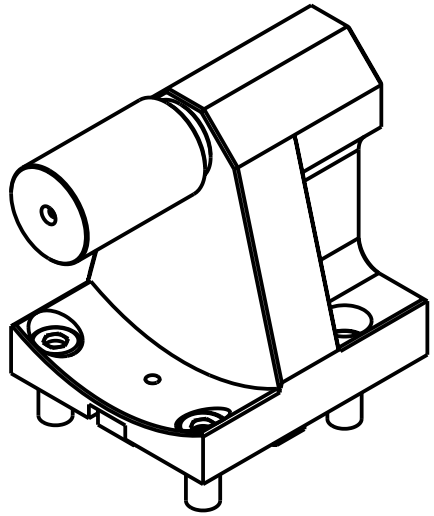

Cod. MT	N°Utensili N°Tools N°Werkzeuge	D	L
0820200	1	38	125
0820200L	1	2"	131.4

GOODWAY

MOD: GTX2000/2600 12ST. - GTZ2000/2600 12ST. - GS2000/2800/3300 16ST. - GMT2000 - GMS2000 15ST. - GLS2800/3300 12ST.

CONTROPUNTA PER CONTROMANDRINO
Tailstock for subspindle
Gegenspitz fuer Gegenspindel

M.T. srl
Via Casino Albini 480
Tel. 0541/956034-957884
Fax 0541/956341
47842 S. GIOVANNI IN M. (RN)
e-mail: mtma@mtmarchetti.com
http://www.mtmarchetti.com

GDW 950-4-00

Subject to change without notice.

03/2024