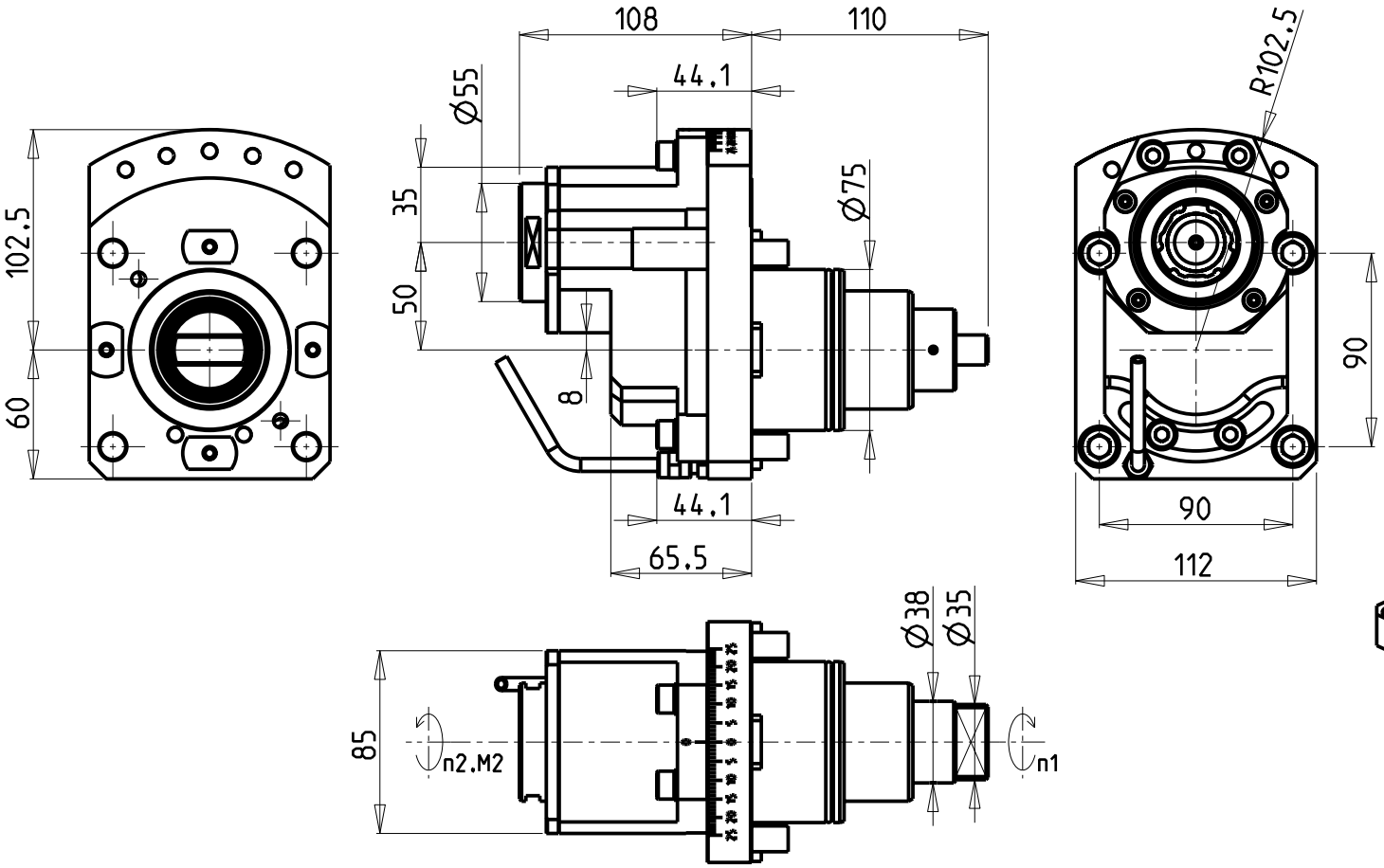

ATTENZIONE - ATTENTION - ACHTUNG

- Per lo smontaggio degli utensili utilizzare sempre la chiave di contrasto come indicato nel manuale d'uso.
- For disassembly of the tools use always the contrast key as mentioned in the user instructions.
- Fuer das Abmontieren der Werkzeuge immer den Gegenschluessel benutzen wie in der Bedienungsanleitung erwaehnt.

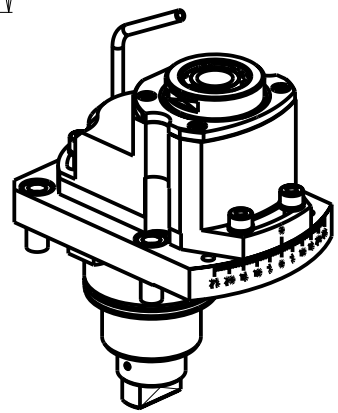

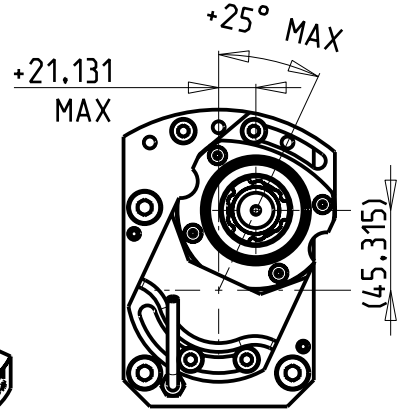

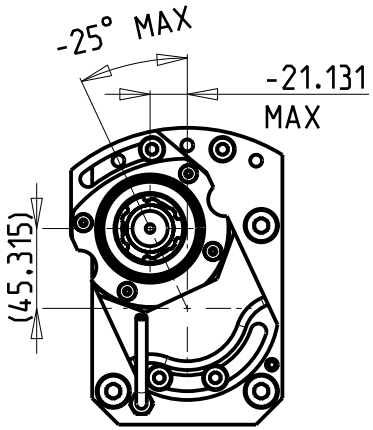

- Chiave inclusa
- Key included
- Schluessel inbegriffen

Cod. MT	Mandrino Spindle Spindel	I (n1:n2)	RPM max n2	Coppia Max Max Torque Max Drehmoment M2 [Nm]	Reversibile lato mandrino/contromandrino Reversible sub/main spindle side Umkehrbare Spindelseite/ Gegenspindelseite	Lubrificazione est. Ext. coolant Aussenkuehlung	CHIAVI NON INCLUSE Keys not included Schluessel nicht einbegriffen		
DW02980332	ERA32	1:1	6000	100	X	X	CHUB30	CHUB50	CHTAER32ZC •

HW ACHEON

HI-TECH 550 MC - HI-TECH 650 MC/YMC - HI-TECH 700 MC (BMT75) - VT550/650 MC

MODULO MOTORIZZATO RADIALE DISASSATO 50mm ORIENTABILE ±25°

Radial ±25° adjustable angle driven tool re-directed by 50mm

Radial angetriebenes Werkzeug schwenkbar ±25° achsversetzt um 50mm

M.T. srl
Via Casino Albini 480
Tel. 0541/956034-957884
Fax 0541/956341
47842 S. GIOVANNI IN M. (RN)
e-mail: mtma@mtmarchetti.com
http://www.mtmarchetti.com

HW C135-3-00

Subject to change without notice.

03/2025