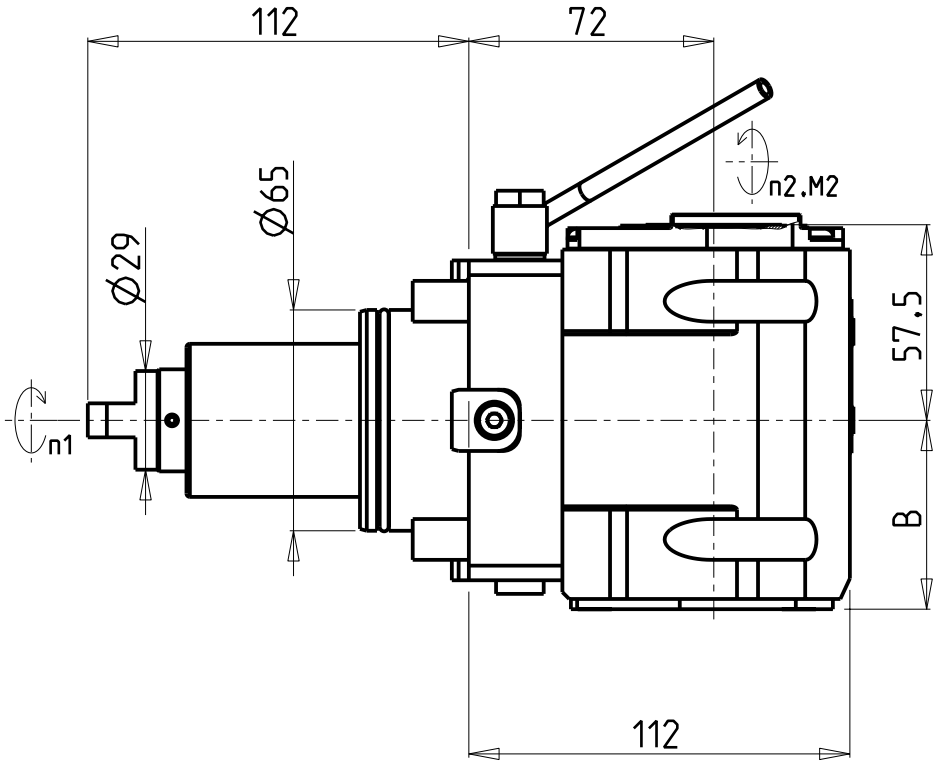

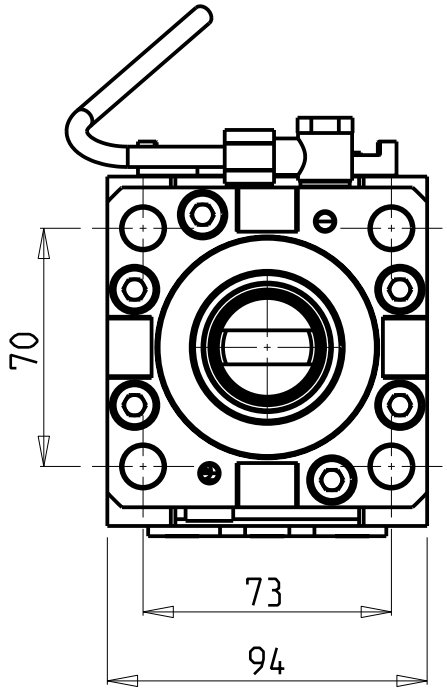

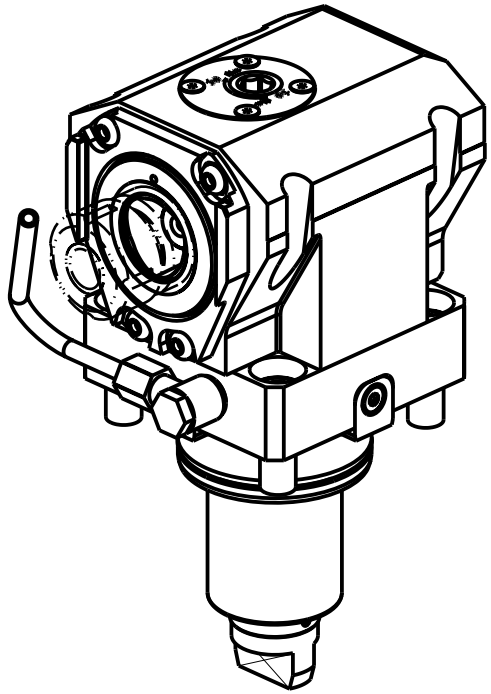

Cod. MT	TAGLIA Size Masse	I (n1:n2)	RPM max n2	Coppia Max Max Torque Max Drehmoment M2 [Nm]	Reversibile lato mandrino/contromandrino Reversible sub/main spindle side Umkehrbare Spindelseite/ Gegenspindelseite	Lubrificazione int. Coolant through Innenkuehlung Pmax [bar]	Lubr.esterna Ext. coolant Aussenkuehlung	B
DW03080140	C4	1:1	6000	100	X	-	X	55.5
DW03080240	C4	1:1	6000	100	X	70	X	66.5

HW ACHEON

HI-TECH 200/230 - HI-TECH 300/350 - HI-TECH 400/450 - CUTEX 240

MODULO MOTORIZZATO ASSIALE MT CAPTO H=72mm
Axial driven tool MT CAPTO H=72mm
Axial angetriebenes Werkzeug MT CAPTO H=72mm

M.T. srl
Via Casino Albini 480
Tel. 0541/956034-957884
Fax 0541/956341
47842 S. GIOVANNI IN M. (RN)
e-mail: mtma@mtmarchetti.com
http://www.mtmarchetti.com

HW C150-B-40

Subject to change without notice.

03/2025