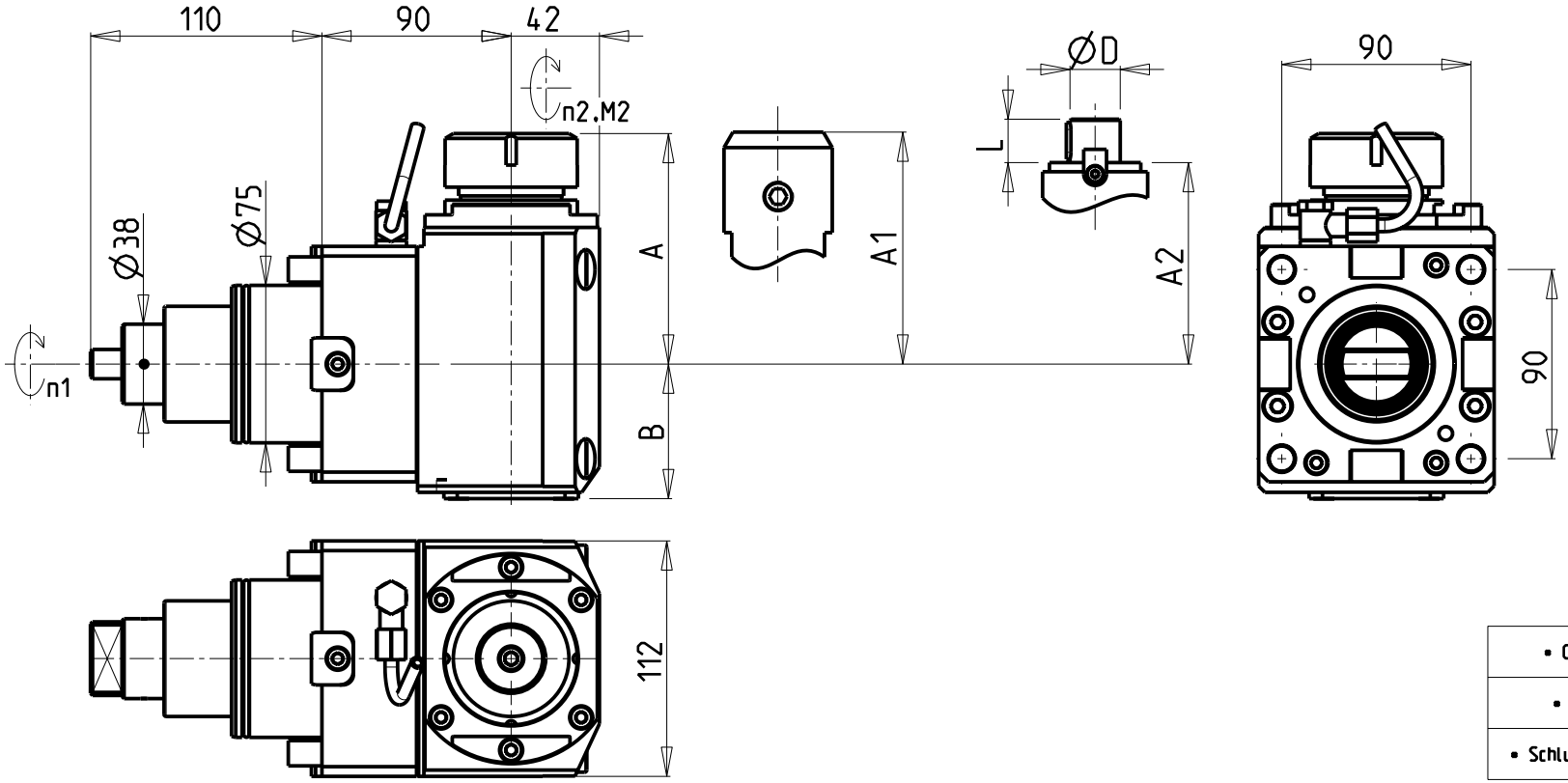

CUSCINETTI MAGGIORATI PER LAVORAZIONI PESANTI

Reinforced bearings for heavy machining

Vergroesserte lager fuer schwerere Bearbeitungen

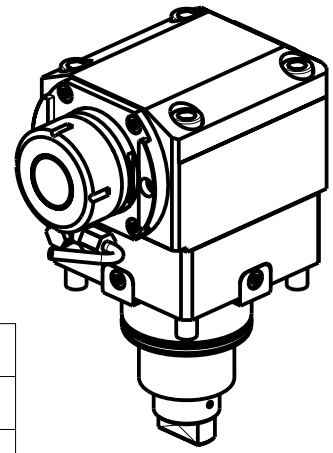

- Chiave inclusa
- Key included
- Schluessel inbegriffen

Cod. MT	Mandrino Spindle Spindel	I (n1:n2)	RPM max n2	Coppia Max Max Torque Max Drehmoment M2 [Nm]	Reversibile lato mandrino/contromandrino Reversible sub/main spindle side Umkehrbare Spindelseite/ Gegenspindelseite	Lubrificazione int. Coolant through Innenkuehlung Pmax [bar]	Lubrificazione est. Ext. coolant Aussenkuehlung	A	A1	A2	B	D	L	CHIAVI NON INCLUSE Keys not included Schluessel nicht einbegriffen	
DW00650140	ER40	1:1	6000	140	X	-	X	109.7	-	-	64	-	-	CHSTER40	OKU0430007 •
DW00650240	ER40	1:1	6000	140	X	70	X	109.7	-	-	76.5	-	-	CHSTER40	OKU0430007 •
DW00650725	WELDON 25	1:1	6000	140	X	-	X	-	109.5	-	64	-	-	-	-
DW00650825	WELDON 25	1:1	6000	140	X	70	X	-	109.5	-	76.5	-	-	-	-
DW00650522	Ø22x19	1:1	6000	140	X	-	X	-	-	89	64	22	19	CH_VTCROCE_M10 •	OKU0430007 •

HWACHEON

HI-TECH 550 MC - HI-TECH 650 MC/YMC

MODULO MOTORIZZATO ASSIALE MAGGIORATO H=90mm
Axial reinforced driven tool H=90mm
Axial angetriebenes Werkzeug vergroesset H=90mm

M.T. srl
Via Casino Albini 480
Tel. 0541/956034-957884
Fax 0541/956341
47842 S. GIOVANNI IN M. (RN)
e-mail: mtma@mtmarchetti.com
http://www.mtmarchetti.com

HWC170-3-20

Subject to change without notice.