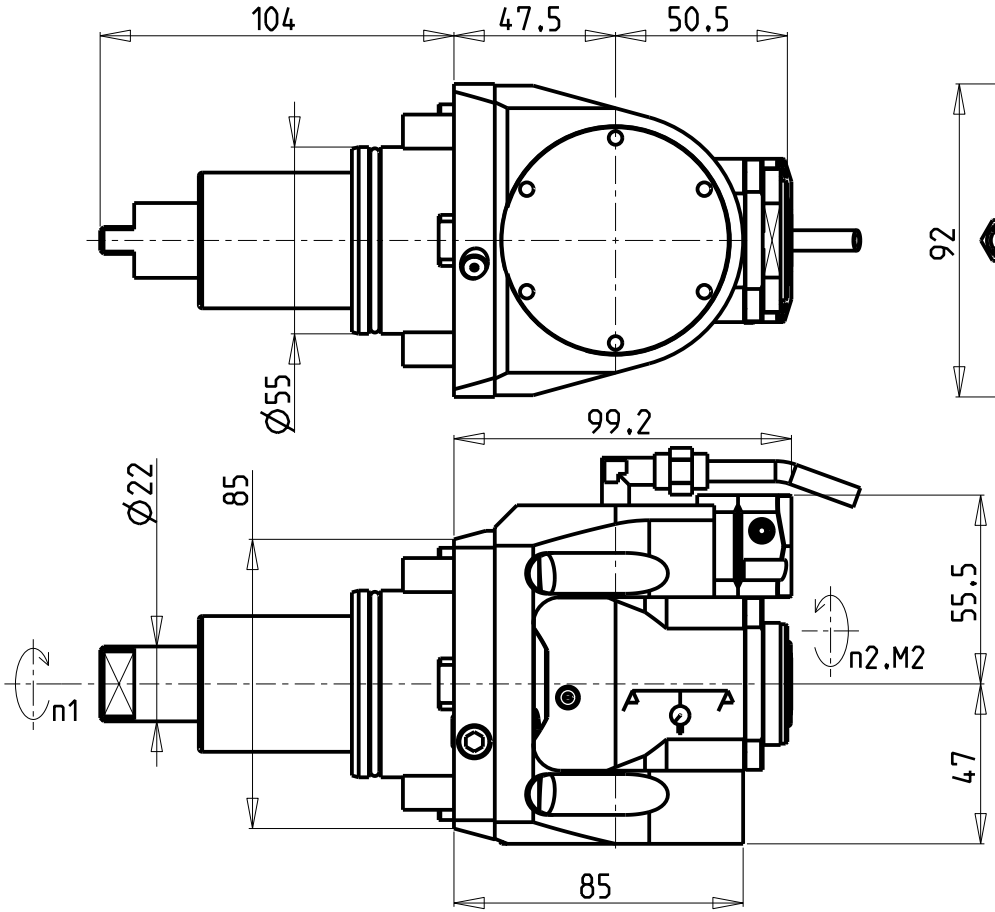

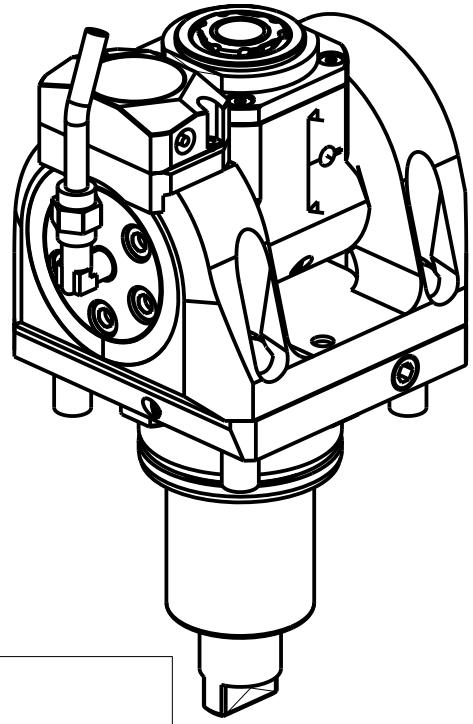

Cod. MT	Mandrino Spindle Spindel	I (n1:n2)	RPM max n2	Coppia Max Max Torque Max Drehmoment M2 [Nm]	Reversibile lato mandrino/contromandrino Reversible sub/main spindle side Umkehrbare Spindelseite/ Gegenspindelseite	Lubrificazione int. Coolant through Innenkuehlung Pmax [bar]	Lubrificazione est. Ext. coolant Aussenkuehlung	CHIAVI INCLUSE Keys included Schluessel inbegriffen			
DW00665120	ERA20	1:1	6000	30	X	-	X	CHUB22	CHUB36	CHTAER20ZC	CHESL07
DW00665220	ERA20	1:1	6000	30	X	70	X	CHUB22	CHUB36	CHTAER20ZC	CHESL07

HW ACHEON

CUTEX 160/180 - C1 (BMT55) - C2 (BMT55)

MODULO MOTORIZZATO ORIENTABILE ±90° CON NONIO DIGITALE H=47.5mm
±90° adjustable angle driven tool with digital display H=47.5mm
Angetriebenes Werkzeug schwenkbar ±90° mit digital display H=47.5mm

M.T. srl
Via Casino Albini 480
Tel. 0541/956034-957884
Fax 0541/956341
47842 S. GIOVANNI IN M. (RN)
e-mail: mtma@mtmarchetti.com
http://www.mtmarchetti.com

HWC335-1-01

Subject to change without notice.

03/2025