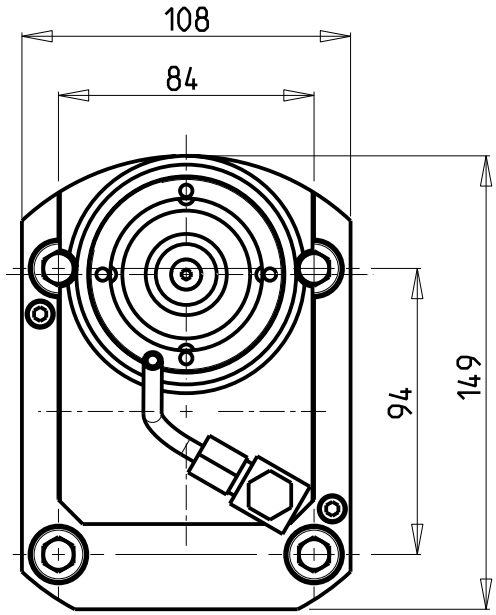

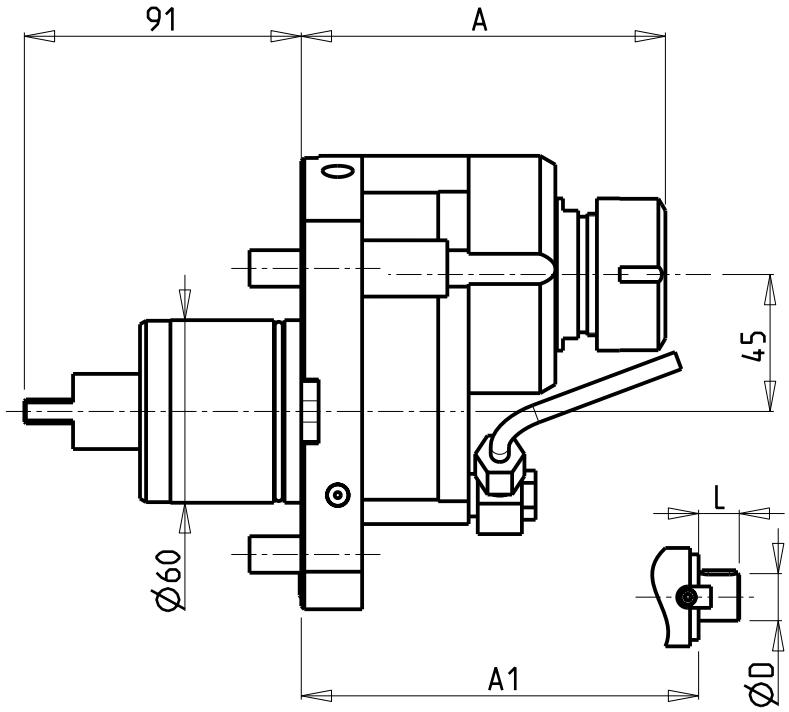

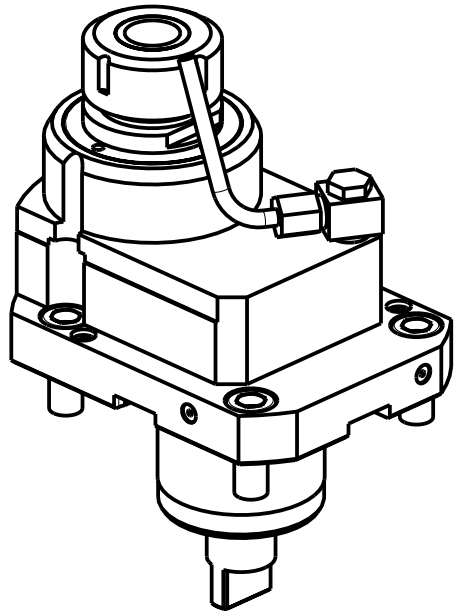

• Chiave inclusa
• Key included
• Schluessel inbegriffen

Cod. MT	Mandrino Spindle Spindel	I	RPM	Coppia Max Max Torque Max Drehmoment	Reversibile lato mandrino/contromandrino Reversible sub/main spindle side Umkehrbare Spindelseite/ Gegenspindelseite	Lubr.esterna Ext. coolant Aussenkuehlung	A	A1	D	L	CHIAVI NON INCLUSE Keys not included Schluessel nicht einbegriffen	
MNL0342132	ER32	2:1	3000	100Nm	X	X	119.66	-	-	-	CHUB36	CHSTER32
MNL0342122	Ø22x19	2:1	3000	100Nm	X	X	-	98	22	19	CHUB36	CH_VTCROCE_M10 •
MNL0342127	Ø27x21	2:1	3000	100Nm	X	X	-	98	27	21	CHUB36	CH_VTCROCE_M12 •
MNL0342119	Ø3/4"x3/4"	2:1	3000	100Nm	X	X	-	98	3/4"	3/4"	CHUB36	CH_VTCROCE_M08 •
MNL0342125	Ø1"x19	2:1	3000	100Nm	X	X	-	98	1"	19	CHUB36	CH_VTCROCE_M12 •

MT EVO (MTRent)

T25Y/SY - T32Y/SY

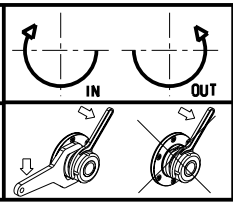

MODULO MOTORIZZATO RADIALE RIDOTTO I=2:1 DISASSATO IN Z 45mm
Radial geared-down I=2:1 driven tool re-directed in Z by 45mm
Radial angetriebenes Werkzeug untersetzt I=2:1 achsversetzt in Z um 45mm

M.T. srl
Via Casino Albini 480
Tel. 0541/956034-957884
Fax 0541/956341
47842 S. GIOVANNI IN M. (RN)
e-mail: mtma@mtmarchetti.com
http://www.mtmarchetti.com

MTR030-1-20

Subject to change without notice.

03/2024