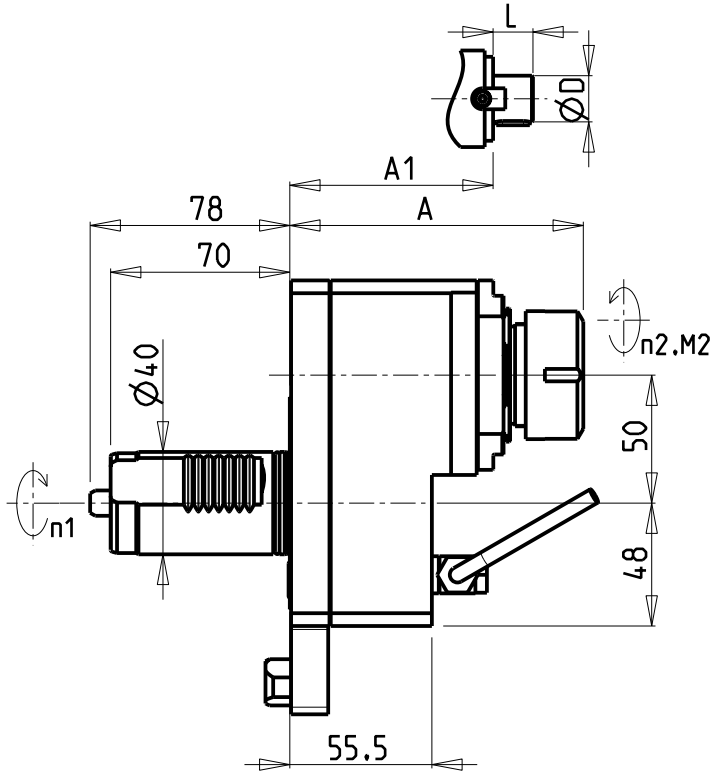

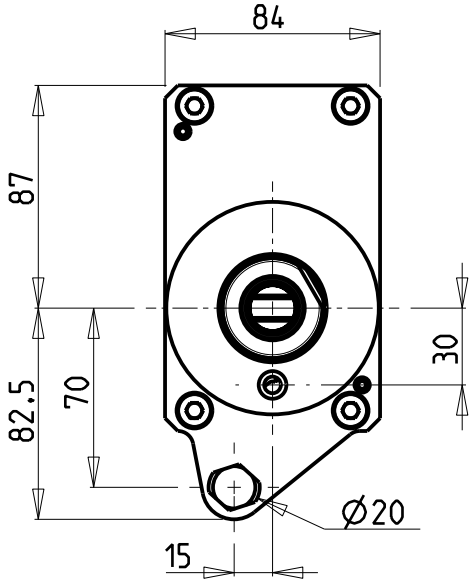

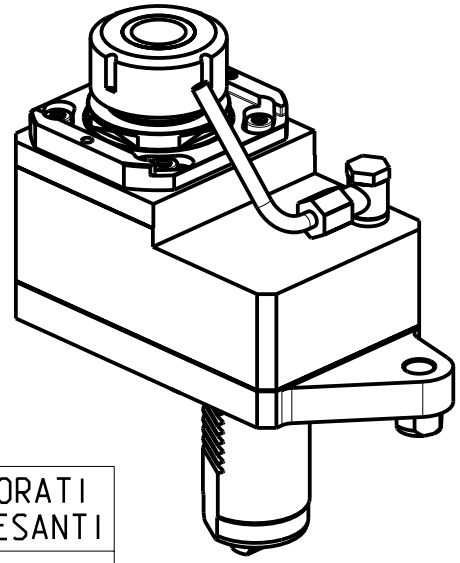

CUSCINETTI MAGGIORATI PER LAVORAZIONI PESANTI
Reinforced bearings for heavy machining
Vergroesserte lager fuer schwerere Bearbeitungen

Cod. MT	Mandrino Spindle Spindel	I (n1:n2)	RPM max n2	Coppia Max Max Torque Max Drehmoment M2 [Nm]	Lubrificazione int. Coolant through Innenkuehlung Pmax [bar]	Lubrificazione est. Ext. coolant Aussenkuhlung	A	A1	D	L	CHIAVI NON INCLUSE Keys not included Schluessel nicht einbegriffen	
MZK0241125	ER25	1:1	6000	70	-	X	111.6	-	-	-	OKU0650004 •	CHSTER25
MZK0241025	ER25	1:1	6000	70	70	X	120.6	-	-	-	OKU0650004 •	CHSTER25
MZK0241132	ER32	1:1	6000	70	-	X	114.6	-	-	-	OKU0650004 •	CHSTER32
MZK0241032	ER32	1:1	6000	70	70	X	123.6	-	-	-	OKU0650004 •	CHSTER32
MZK0241116	Ø16x17	1:1	6000	70	-	X	-	88	16	17	OKU0650004 •	CH_VTCROCE_M08 •
MZK0241122	Ø22x19	1:1	6000	70	-	X	-	90	22	19	OKU0650004 •	CH_VTCROCE_M10 •
MZK0241127	Ø27x21	1:1	6000	70	-	X	-	92	27	21	OKU0650004 •	CH_VTCROCE_M12 •

• Chiave inclusa
• Key included
• Schluessel inbegriffen

MAZAK

SQT 15-18M/MS/MY/MSY 12 STAZIONI - SQT200-250M/MS/MY/MSY 12 STAZIONI - QT NEXUS 200-250M/MS/MY/MSY 12 STAZIONI
QT NEXUS 200II-250II M/MS/MY/MSY 12 STAZIONI - SUPER QUADREX 200-250M - IVS200/300M

MODULO MOTORIZZATO RADIALE MAGGIORATO DISASSATO IN Z 50mm
Radial reinforced driven tool re-directed in Z by 50mm
Radial angetriebenes Werkzeug vergroesset achsversetzt in Z um 50mm

M.T. srl
Via Casino Albini 480
Tel. 0541/956034-957884
Fax 0541/956341
47842 S. GIOVANNI IN M. (RN)
e-mail: mtma@mtmarchetti.com
http://www.mtmarchetti.com

MZK031-1-10

Subject to change without notice.

03/2025