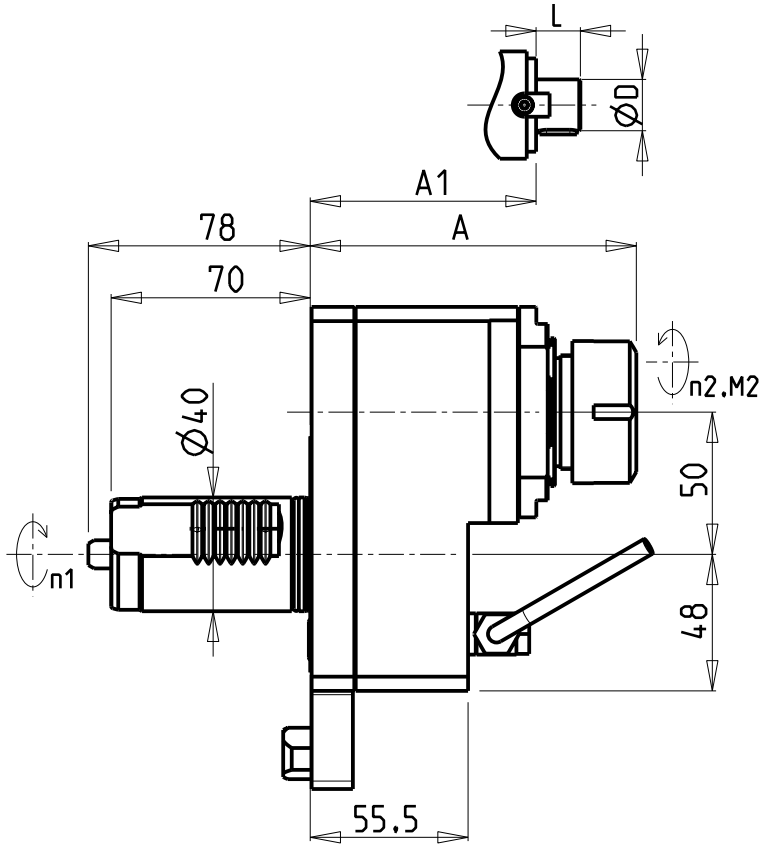

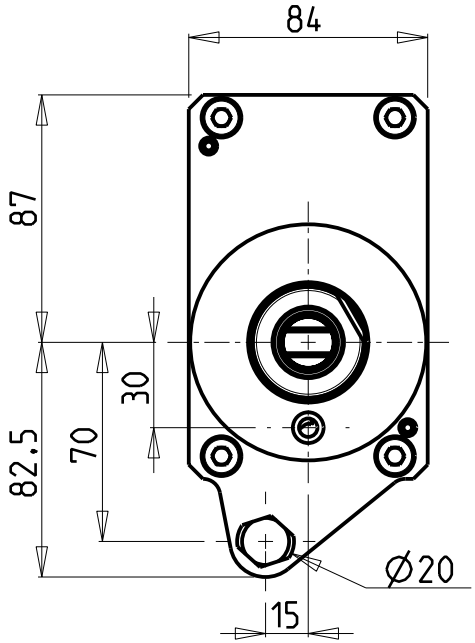

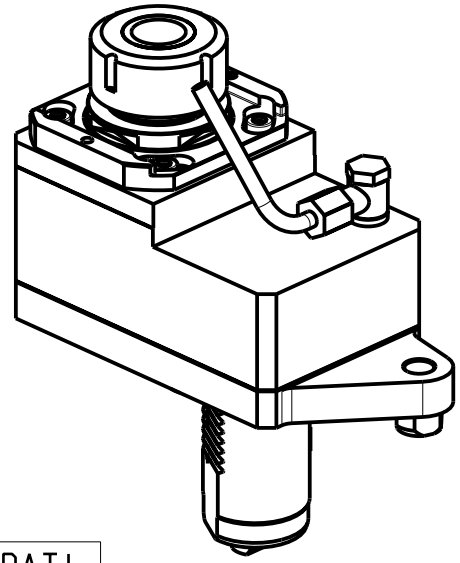

CUSCINETTI MAGGIORATI PER LAVORAZIONI PESANTI
Reinforced bearings for heavy machining
Vergroesserte lager fuer schwerere Bearbeitungen

Cod. MT	Mandrino Spindle Spindel	I (n1:n2)	RPM max n2	Coppia Max Max Torque Max Drehmoment M2 (Nm)	Lubrificazione est. Ext. coolant Aussenkuhlung	A	A1	D	L	CHIAVI NON INCLUSE Keys not included Schluessel nicht einbegriffen	
MZK0241225	ER25	2:1	3000	80	X	111.6	-	-	-	OKU0650004 •	CHSTER25
MZK0241232	ER32	2:1	3000	80	X	114.6	-	-	-	OKU0650004 •	CHSTER32
MZK0241216	Ø16x17	2:1	3000	80	X	-	88	16	17	OKU0650004 •	CH_VTCROCE_M08 •
MZK0241222	Ø22x19	2:1	3000	80	X	-	90	22	19	OKU0650004 •	CH_VTCROCE_M10 •
MZK0241227	Ø27x21	2:1	3000	80	X	-	92	27	21	OKU0650004 •	CH_VTCROCE_M12 •

• Chiave inclusa
• Key included
• Schluessel inbegriffen

MAZAK

SQT 15-18M/MS/MY/MSY 12 STAZIONI - SQT200-250M/MS/MY/MSY 12 STAZIONI - QT NEXUS 200-250M/MS/MY/MSY 12 STAZIONI
QT NEXUS 200II-250II M/MS/MY/MSY 12 STAZIONI - SUPER QUADREX 200-250M - IVS200/300M

MODULO MOTORIZZATO RADIALE MAGGIORATO RIDOTTO I=2:1 DISASSATO IN Z 50mm
Radial reinforced geared-down I=2:1 driven tool re-directed in Z by 50mm
Radial angetriebenes Werkzeug vergroesset untersetzt I=2:1 achsversetzt in Z um 50mm

M.T. srl
Via Casino Albini 480
Tel. 0541/956034-957884
Fax 0541/956341
47842 S. GIOVANNI IN M. (RN)
e-mail: mtma@mtmarchetti.com
http://www.mtmarchetti.com

MZK031-1-20

Subject to change without notice.

03/2025