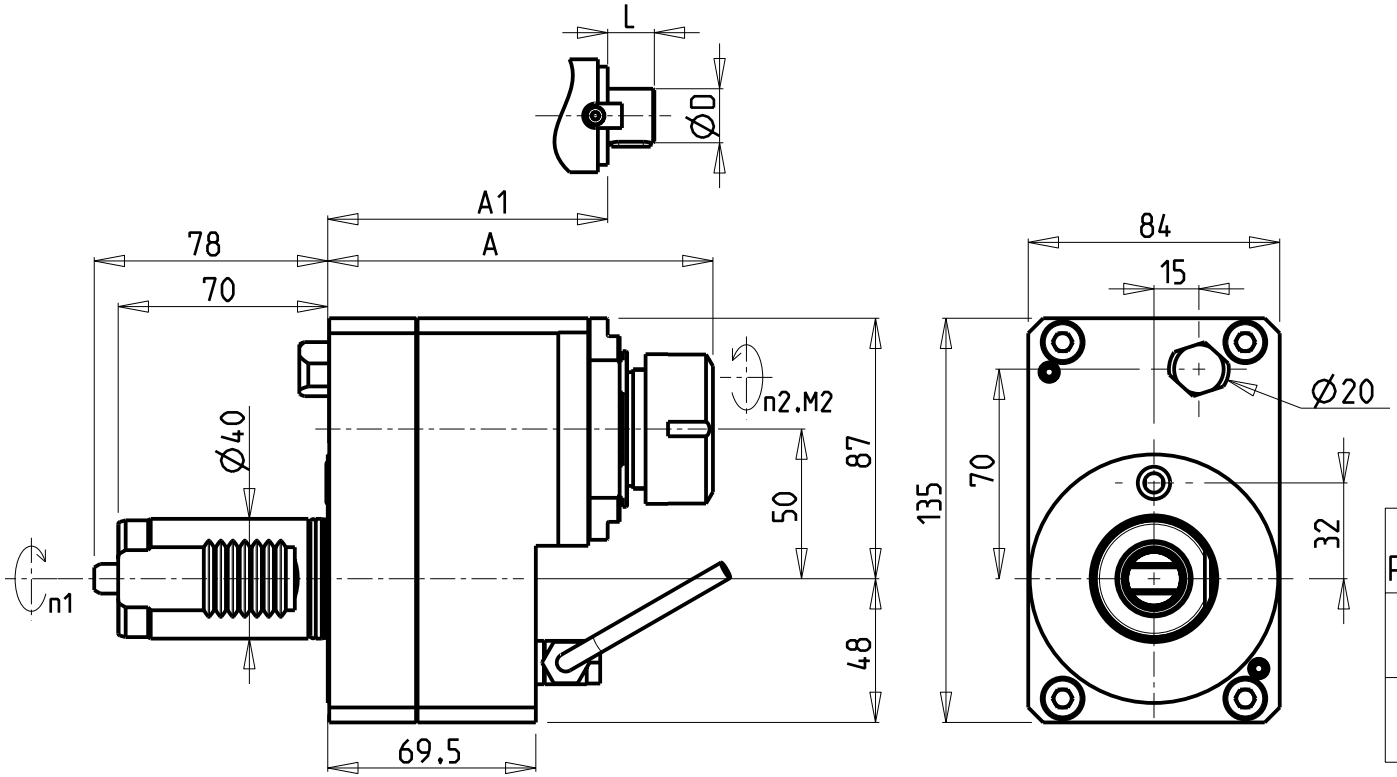

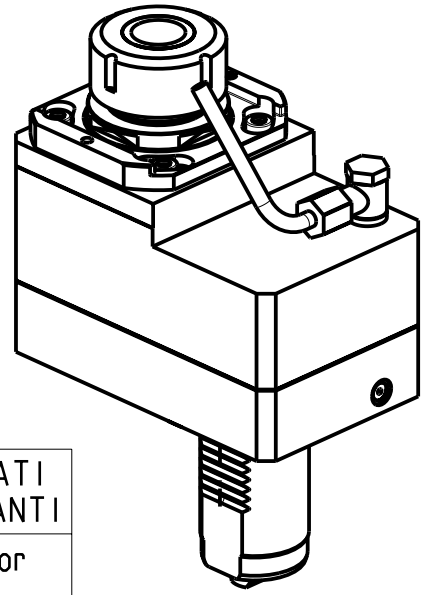

CUSCINETTI MAGGIORATI PER LAVORAZIONI PESANTI

Reinforced bearings for heavy machining

Vergroesserte lager fuer schwerere Bearbeitungen

Cod. MT	Mandrino Spindle Spindel	I (n1:n2)	RPM max n2	Coppia Max Max Torque Max Drehmoment M2 [Nm]	Lubrificazione int. Coolant through Innenkuehlung Pmax [bar]	Lubrificazione est. Ext. coolant Aussenkuhlung	A	A1	D	L	CHIAVI NON INCLUSE Keys not included Schluessel nicht einbegriffen	
MZK0231125	ER25	1:1	6000	70	-	X	125.6	-	-	-	OKU0650004 •	CHSTER25
MZK0231025	ER25	1:1	6000	70	70	X	125.6	-	-	-	OKU0650004 •	CHSTER25
MZK0231132	ER32	1:1	6000	70	-	X	128.6	-	-	-	OKU0650004 •	CHSTER32
MZK0231032	ER32	1:1	6000	70	70	X	128.6	-	-	-	OKU0650004 •	CHSTER32
MZK0231116	Ø16x17	1:1	6000	70	-	X	-	102	16	17	OKU0650004 •	CH_VTCROCE_M08 •
MZK0231122	Ø22x19	1:1	6000	70	-	X	-	104	22	19	OKU0650004 •	CH_VTCROCE_M10 •
MZK0231127	Ø27x21	1:1	6000	70	-	X	-	106	27	21	OKU0650004 •	CH_VTCROCE_M12 •

• Chiave inclusa

• Key included

• Schluessel inbegriffen

MAZAK

MULTIPLEX 420-620-625-6200-6250 12 STAZIONI / HYPER QUADREX 200-250MSY 12 STAZIONI
MULTIPLEX 8200 (TORRETTA SUP. 12 STAZIONI) - MULTIPLEX W-200 12 STAZIONI

MODULO MOTORIZZATO RADIALE MAGGIORATO DISASSATO IN Z 50mm
Radial reinforced driven tool re-directed in Z by 50mm
Radial angetriebenes Werkzeug vergroesset achsversetzt in Z um 50mm

M.T. srl
Via Casino Albini 480
Tel. 0541/956034-957884
Fax 0541/956341
47842 S. GIOVANNI IN M. (RN)
e-mail: mtma@mtmarchetti.com
http://www.mtmarchetti.com

MZK031-3-10

Subject to change without notice.

03/2025