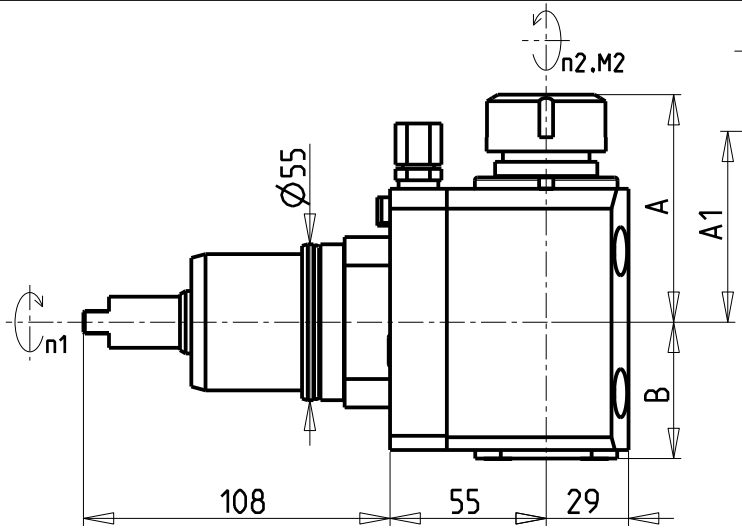

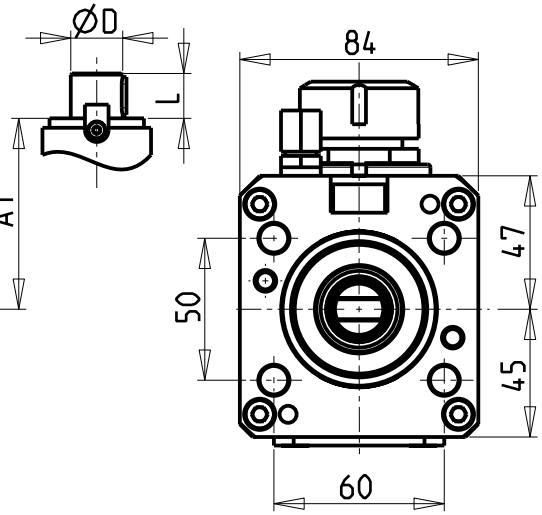

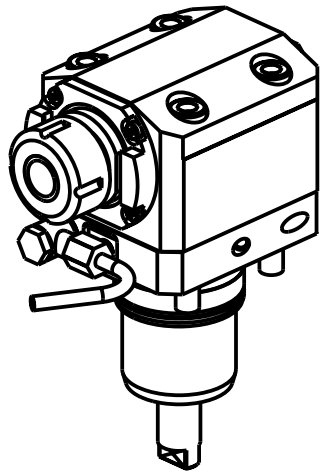

ATTENZIONE - ATTENTION - ACHTUNG

- Per lo smontaggio degli utensili utilizzare sempre la chiave di contrasto come indicato nel manuale d'uso.
- For disassembly of the tools use always the contrast key as mentioned in the user instructions.
- Fuer das Abmontieren der Werkzeuge immer den Gegenschluessel benutzen wie in der Bedienungsanleitung erwaehnt.

- Chiave inclusa
- Key included
- Schluessel inbegriffen

Cod. MT	Mandrino Spindle Spindel	I (n1:n2)	RPM max n2	Coppia Max Max Torque Max Drehmoment M2 [Nm]	Reversibile lato mandrino/contromandrino Reversible sub/main spindle side Umkehrbare Spindelseite/ Gegenspindelseite	Lubrificazione int. Coolant through Innenkuehlung Pmax [bar]	Lubr. esterna Ext. coolant Aussenkuhlung	A	A1	B	D	L	CHIAVI NON INCLUSE Keys not included Schluessel nicht einbegriffen	
NKM0021620	ER20	1:1	6000	50	X	-	X	80.66	-	48	-	-	OKU0290009 •	CHSTER20
NKM0021820	ER20	1:1	6000	50	X	70	X	80.66	-	59	-	-	OKU0290009 •	CHSTER20
NKM0021420	ERA20	1:1	6000	50	X	-	X	69.23	-	48	-	-	OKU0290009 •	CHUB22
NKM0021520	ERA20	1:1	6000	50	X	70	X	69.23	-	59	-	-	OKU0290009 •	CHUB22
NKM0021425	ER25	1:1	6000	50	X	-	X	82.16	-	48	-	-	OKU0290009 •	CHSTER25
NKM0021625	ER25	1:1	6000	50	X	70	X	82.16	-	59	-	-	OKU0290009 •	CHSTER25
NKM0022432	ER32	1:1	6000	50	X	-	X	92.16	-	48	-	-	OKU0290009 •	CHSTER32
NKM0022532	ER32	1:1	6000	50	X	70	X	92.16	-	59	-	-	OKU0290009 •	CHSTER32
NKM0021617	Ø16x17	1:1	6000	50	X	-	X	-	63	48	16	17	CHUB36	CH_VTCROCE_M08 •
NKM0022219	Ø22x19	1:1	6000	50	X	-	X	-	63	48	22	19	CHUB36	CH_VTCROCE_M10 •
NKM0022721	Ø27x21	1:1	6000	50	X	-	X	-	65.5	48	27	21	CHUB36	CH_VTCROCE_M12 •
NKM0022737	Ø27x37	1:1	6000	50	X	-	X	-	65.5	48	27	37	CHUB36	CH_VTCROCE_M12 •

NAKAMURA-TOME

WT150/250 - WT150II/250II - WTW150 - WTS150 - SUPER NTM3 - SUPER NTJ - SC150/200/250 - SC200II 12/16 ST.
SC300II 16ST. - NTY3 150(V)/250 - TW10M/MY/MM/MMY/MMYY-TW20M/MY/MM/MMY/MMYY 16ST. - WY 150(V)/250 - AS200 15/12 ST.

MODULO MOTORIZZATO ASSIALE H=55mm
Axial driven tool H=55mm
Axial angetriebenes Werkzeug H=55mm

M.T. srl
Via Casino Albini 480
Tel. 0541/956034-957884
Fax 0541/956341
47842 S. GIOVANNI IN M. (RN)
e-mail: mtma@mtmarchetti.com
http://www.mtmarchetti.com

NKM150-2-10

Subject to change without notice.