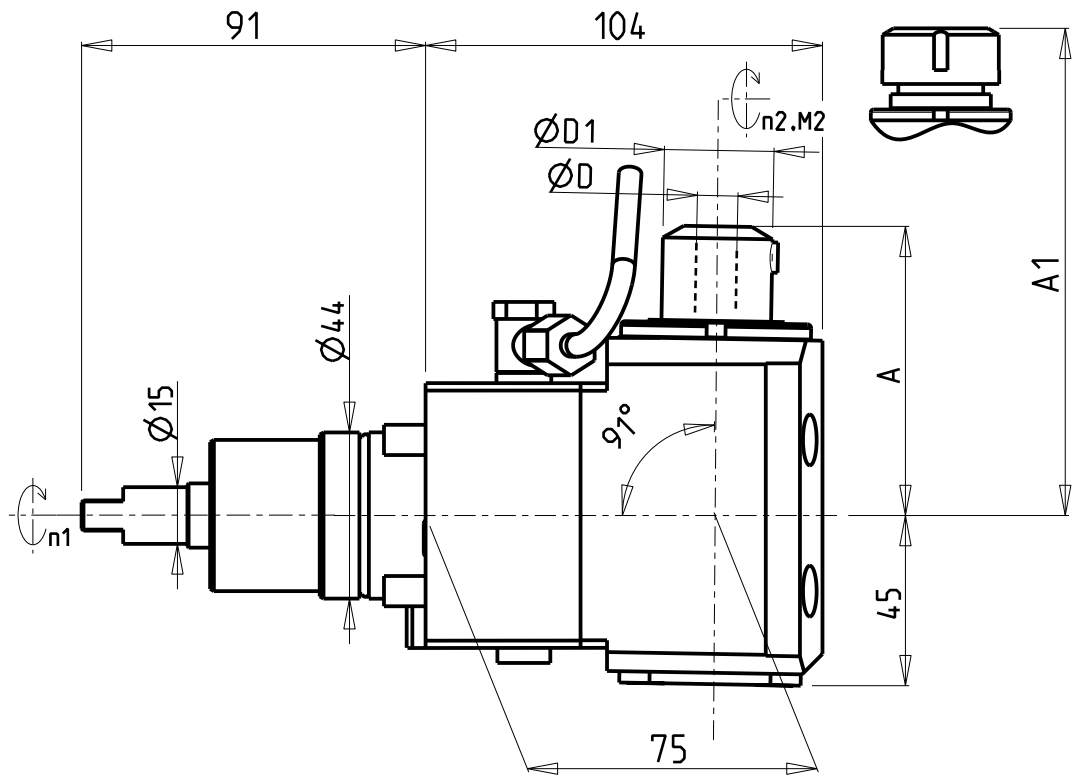

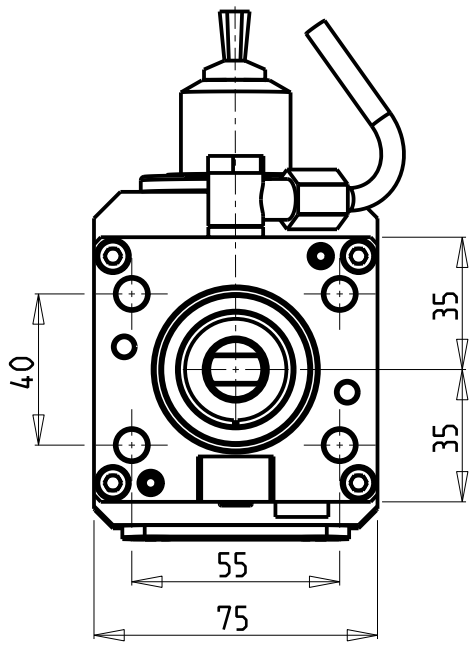

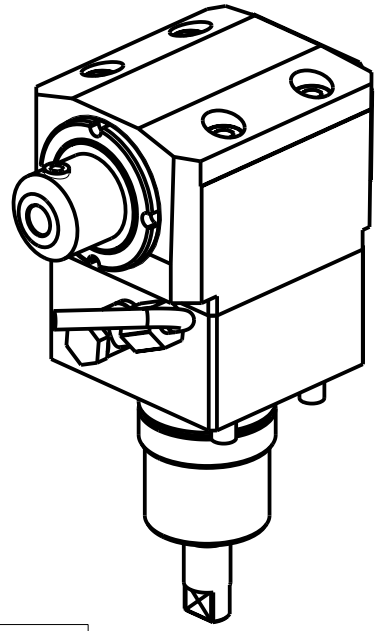

Cod. MT	Mandrino Spindle Spindel	I (n1:n2)	RPM max n2	Coppia Max Max Torque Max Drehmoment M2 [Nm]	Reversibile lato mandrino/contromandrino Reversible sub/main spindle side Umkehrbare Spindelseite/ Gegenspindelseite	Lubrificazione est. Ext. coolant Aussenkuehlung	A	A1	D	D1	CHIAVI NON INCLUSE Keys not included Schluessel nicht einbegriffen	
NKM1479125	ER25	1:1	6000	35	X	X	-	82.4	-	-	CHUB36	CHSTER25
NKM1479108	WELDON 8	1:1	6000	35	X	X	76.5	-	8	29	-	-
NKM1479110	WELDON 10	1:1	6000	35	X	X	76.5	-	10	29	-	-
NKM1479112	WELDON 12	1:1	6000	35	X	X	76.5	-	12	29	-	-
NKM1479116	WELDON 16	1:1	6000	35	X	X	73.5	-	16	32	-	-

NAKAMURA-TOME

MOD: SUPER NTMX - SUPER NTMXL - MX-5 - NTJ100 - SC100 - SC100X^2 - MX100

MODULO MOTORIZZATO ASSIALE PER POLIGONATURA INTERNA H=75mm
Axial driven tool for internal polygon-making H=75mm
Axial angetriebenes Werkzeug fuer interne Facettierung H=75mm

M.T. srl
Via Casino Albini 480
Tel. 0541/956034-957884
Fax 0541/956341
47842 S. GIOVANNI IN M. (RN)
e-mail: mtma@mtmarchetti.com
http://www.mtmarchetti.com

NKM230-1-20

Subject to change without notice.

03/2025