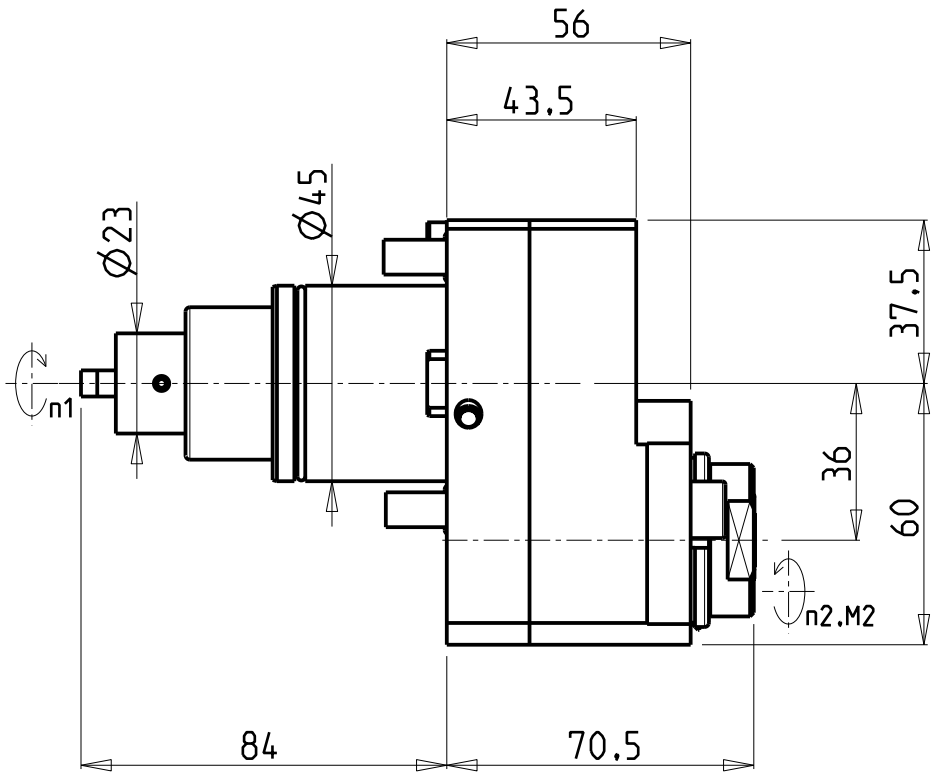

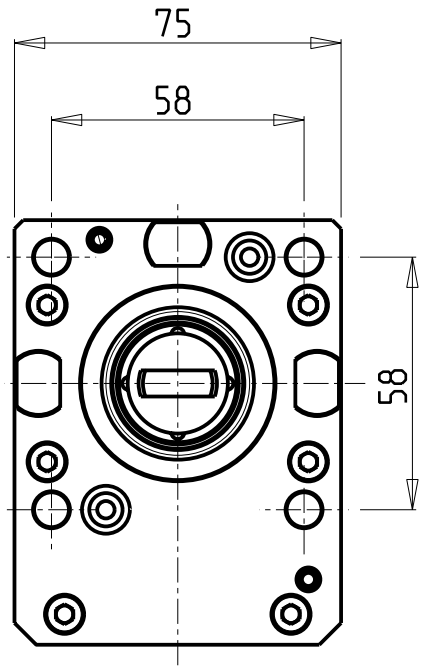

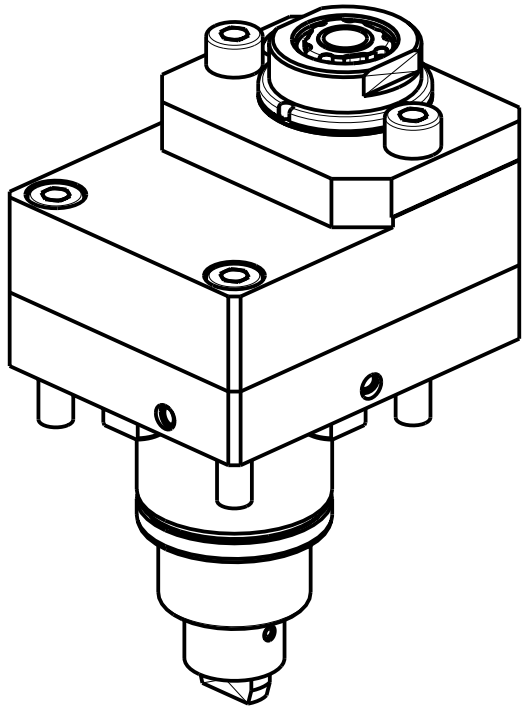

• Chiave inclusa
• Key included
• Schluessel inbegriffen

Cod. MT	Mandrino Spindle Spindel	I (n1:n2)	RPM max n2	Coppia Max Max Torque Max Drehmoment M2 [Nm]	Reversibile lato mandrino/contromandrino Reversible sub/main spindle side Umkehrbare Spindelseite/ Gegenspindelseite	Lubrificazione int. Coolant through Innenkuehlung Pmax [bar]	Lubrificazione est. Ext. coolant Aussenkuehlung	CHIAVI NON INCLUSE Keys not included Schluessel nicht einbegriffen		
DW01890316	ERA16	1:1	6000	25	X	–	X	CHUB30	CHUB19_SP3	CHTAER16ZC •
DW01890416	ERA16	1:1	6000	25	X	70	X	CHUB30	CHUB19_SP3	CHTAER16ZC •

ROMI

MOD: GL 250Y/S

MODULO MOTORIZZATO RADIALE DISASSATO IN Z 36mm
Radial driven tool re-directed in Z by 36mm
Radial angetriebenes Werkzeug achsversetzt in Z um 36mm

M.T. srl
Via Casino Albini 480
Tel. 0541/956034-957884
Fax 0541/956341
47842 S. GIOVANNI IN M. (RN)
e-mail: mtma@mtmarchetti.com
http://www.mtmarchetti.com

ROM030-1-10

Subject to change without notice.

03/2025