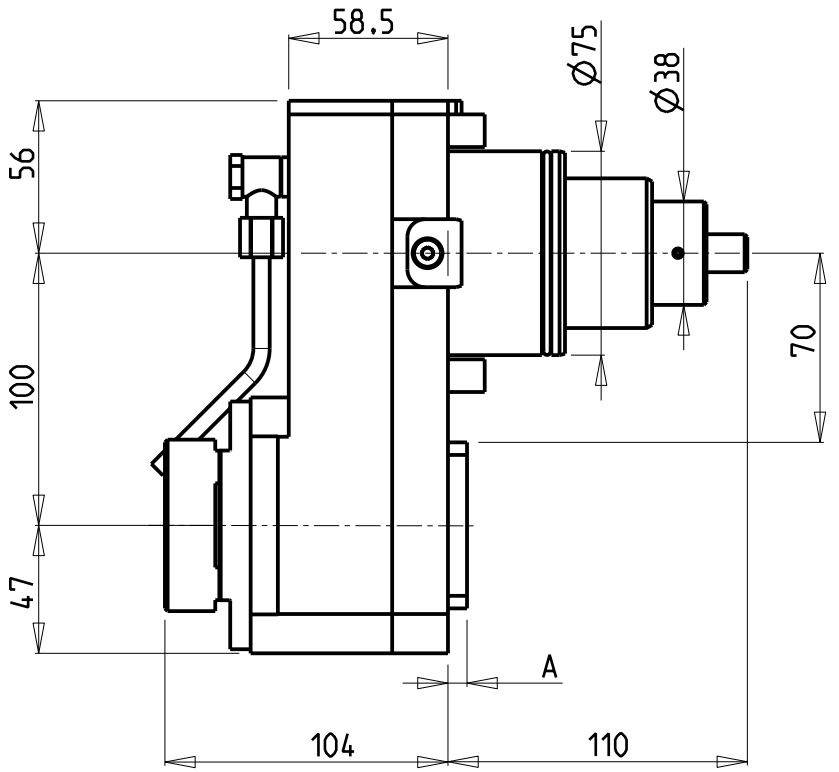

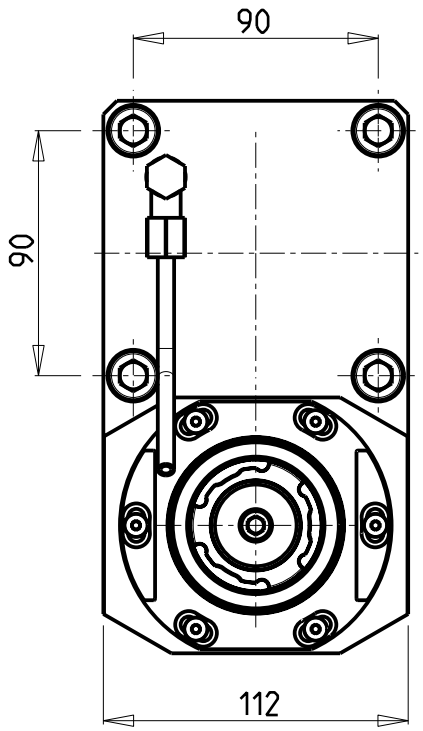

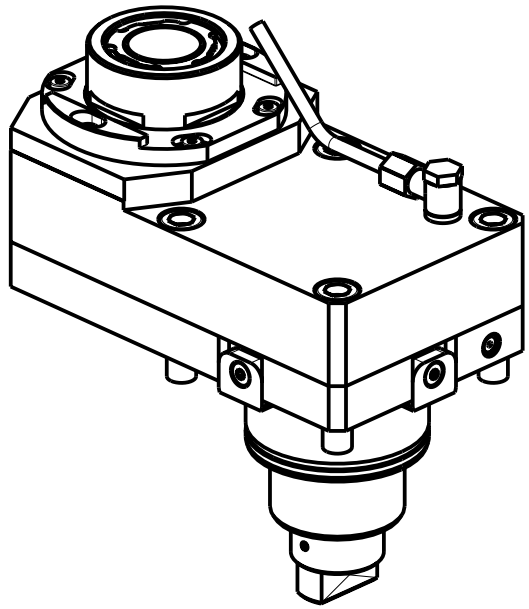

Cod. MT	Mandrino Spindle Spindel	I	RPM	Coppia Max Max Torque Max Drehmoment	Lubr.interna Coolant through Innenkuehlung	Lubr. esterna Ext. coolant Aussenkuehlung	A	CHIAVI NON INCLUSE Keys not included Schluessel nicht einbegriffen		
DW01992140	ERA40	2:1	3000	160Nm	-	X	7	CHUB36	OKU0430007 •	CHTAER40ZC •
DW01994240	ERA40	2:1	3000	160Nm	P=70bar	X	18	CHUB36	OKU0430007 •	CHTAER40ZC •

• Chiave inclusa
• Key included
• Schluessel inbegriffen

ROMI

MOD: GL 450M/Y/S - G 550M

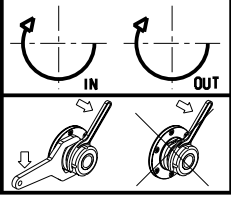

MODULO MOTORIZZATO RADIALE RIDOTTO I=2:1 DISASSATO IN Z 100mm
Radial geared-down I=2:1 driven tool re-directed in Z by 100mm
Radial angetriebenes Werkzeug untersetzt I=2:1 achsversetzt in Z um 100mm

M.T. srl
Via Casino Albini 480
Tel. 0541/956034-957884
Fax 0541/956341
47842 S. GIOVANNI IN M. (RN)
e-mail: mtma@mtmarchetti.com
http://www.mtmarchetti.com

ROM030-4-20

Subject to change without notice.

03/2024