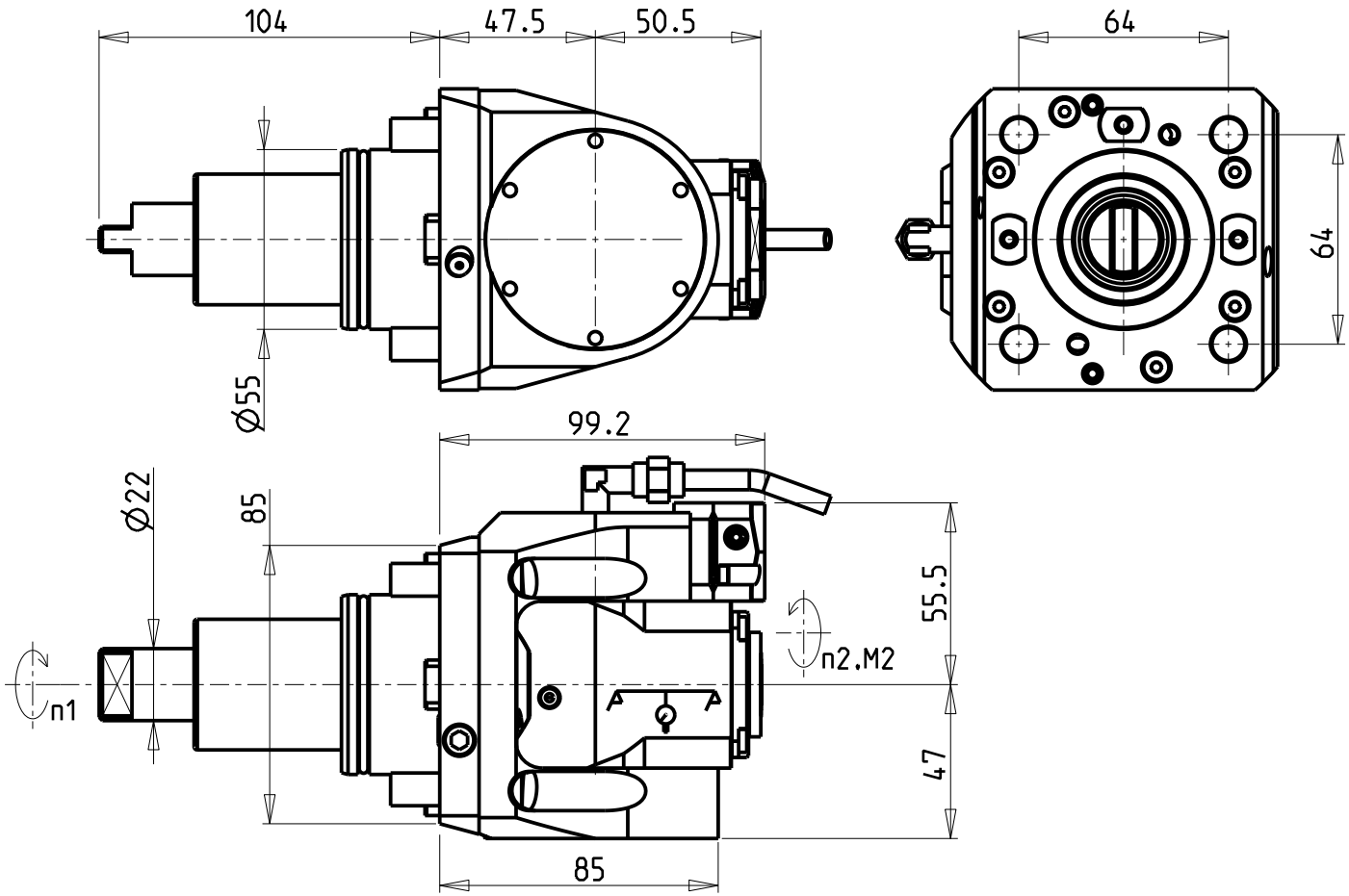

ATTENZIONE - ATTENTION - ACHTUNG

-Su macchine PUMA 280, PUMA TT1500-TT1800-TT2100 serie non arriva in centro mandrino.

-On machines PUMA 280, PUMA TT1500-TT1800-TT2100 series tool does not get to the centre of the spindle axis.

-Auf Maschinen PUMA 280, PUMA TT1500-TT1800-TT2100 serie erreicht das Werkzeug nicht die Mitte der Werkzeug-Achse.

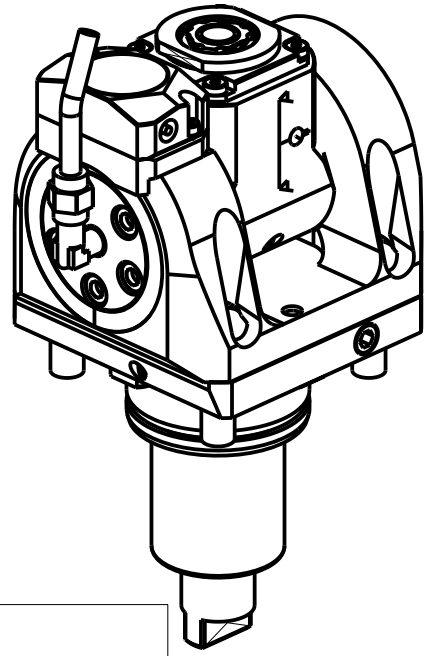

Cod. MT	Mandrino Spindle Spindel	I (n1:n2)	RPM max n2	Coppia Max Max Torque Max Drehmoment M2 [Nm]	Reversibile lato mandrino/contromandrino Reversible sub/main spindle side Umkehrbare Spindelseite/ Gegenspindelseite	Lubrificazione int. Coolant through Innenkuehlung Pmax [bar]	Lubrificazione est. Ext. coolant Aussenkuehlung	CHIAVI INCLUSE Keys included Schluessel inbegriffen			
DW00665316	ERA16	1:2	12000	8	X	-	X	CHUB19_SP3	CHUB32	CHTAER16ZC	CHESL07
DW00665416	ERA16	1:2	12000	8	X	70	X	CHUB19_SP3	CHUB32	CHTAER16ZC	CHESL07

ROMI

MOD: GL 300Y/S

MODULO MOTORIZZATO ORIENTABILE +/-90° MOLTIPLICATO I=1:2 CON NONIO DIGITALE H=47.5mm
+/-90° adjustable angle driven tool geared-up I=1:2 with digital display H=47.5mm
Angetriebenes Werkzeug schwenkbar +/-90° uebersetzt I=1:2 mit digital display H=47.5mm

M.T. srl
Via Casino Albini 480
Tel. 0541/956034-957884
Fax 0541/956341
47842 S. GIOVANNI IN M. (RN)
e-mail: mtma@mtmarchetti.com
http://www.mtmarchetti.com

ROM336-2-01

Subject to change without notice.

03/2025