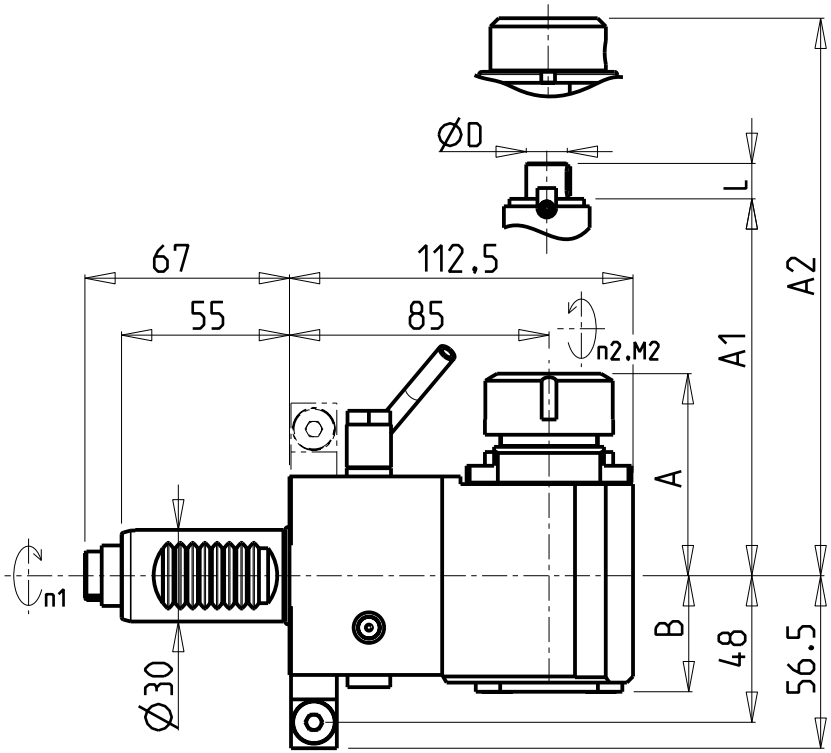

versione dx
right version
version rechts

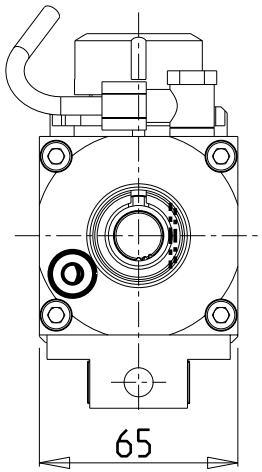

versione sx
left version
version links

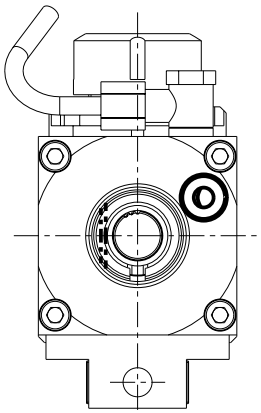

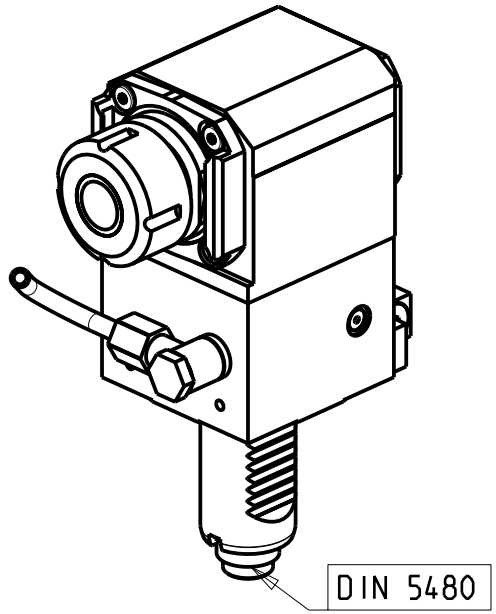

• Chiave inclusa
• Key included
• Schluessel inbegriffen

Cod. MT		Mandrino Spindle Spindel	I (n1:n2)	RPM max n2	Coppia Max Max Torque Max Drehmoment M2 (Nm)	Lubrificazione int. Coolant through Innenkuehlung Pmax (bar)	Lubr.esterna Ext. coolant Aussenkuehlung	Lav. secco Dry-run Trocken Bearb.	ØD	L	A	A1	A2	B	CHIAVI NON INCLUSE Keys not included Schluessel nicht einbegriffen	
versione dx right version version rechts	versione sx left version version links															
SAU0080125	SAU0081125	ER25	1:1	6000	32	-	X	X	-	-	66.2	-	-	38	OKU0290009 •	CHSTER25
SAU0080225	SAU0081225	ER25	1:1	6000	32	100 (diag. 2)	X	X	-	-	66.2	-	-	48	OKU0290009 •	CHSTER25
SAU0080316	SAU0081316	WELDON16	1:1	6000	32	-	X	X	-	-	-	-	54.5	38	-	-
SAU0080416	SAU0081416	Ø16x17	1:1	6000	32	-	X	X	16	17	-	45	-	38	OKU0290009 •	CH_VTCROCE_M08 •
SAU0080422	SAU0081422	Ø22x19	1:1	6000	32	-	X	X	22	19	-	47	-	38	OKU0290009 •	CH_VTCROCE_M10 •

SAUTER
VDI 30

MODULO MOTORIZZATO RADIALE VDI30 DIN 5480 H=85mm
Radial driven tool VDI30 DIN 5480 H=85mm
Radial angetriebenes Werkzeug VDI30 DIN 5480 H=85mm

M.T. srl
Via Casino Albini 480
Tel. 0541/956034-957884
Fax 0541/956341
47842 S. GIOVANNI IN M. (RN)
e-mail: mtma@mtmarchetti.com
http://www.mtmarchetti.com

SAU018-2-00

Subject to change without notice.

03/2026