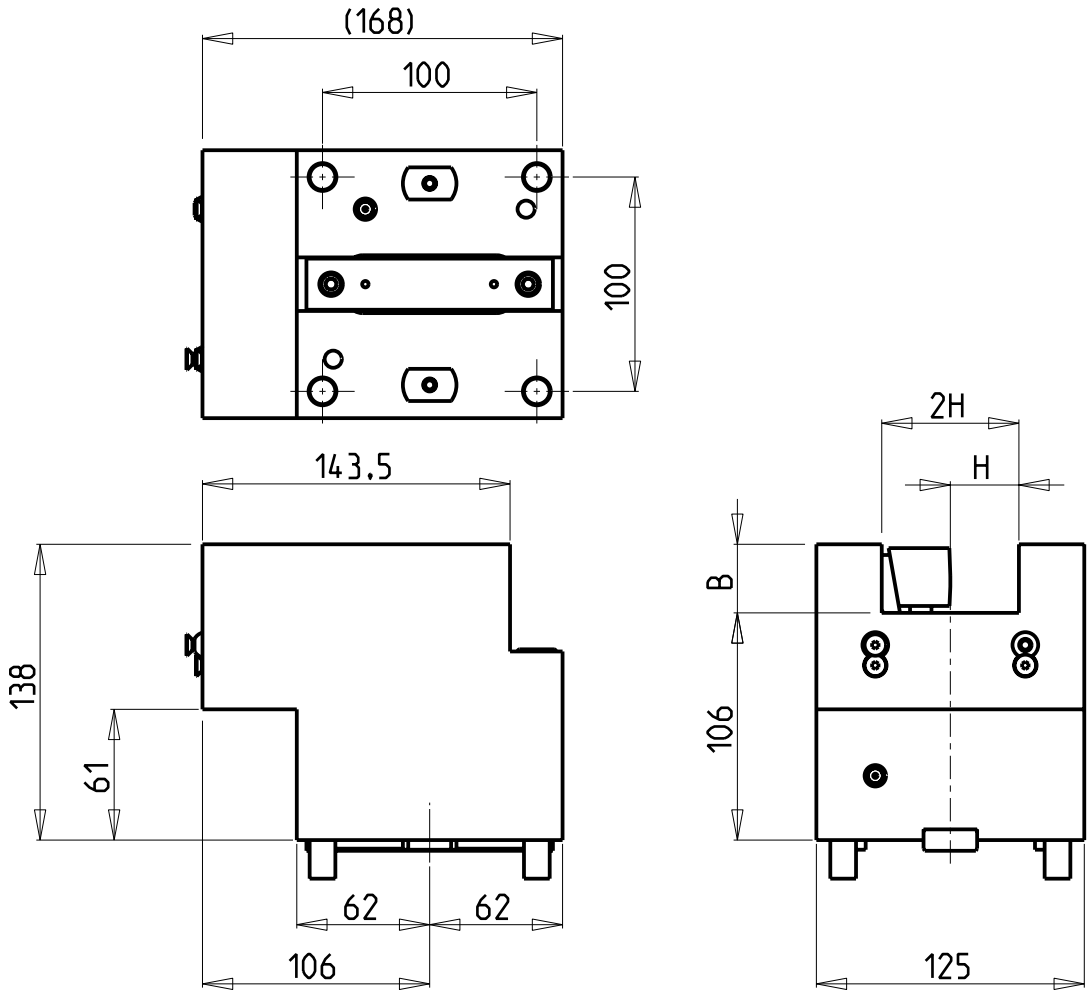

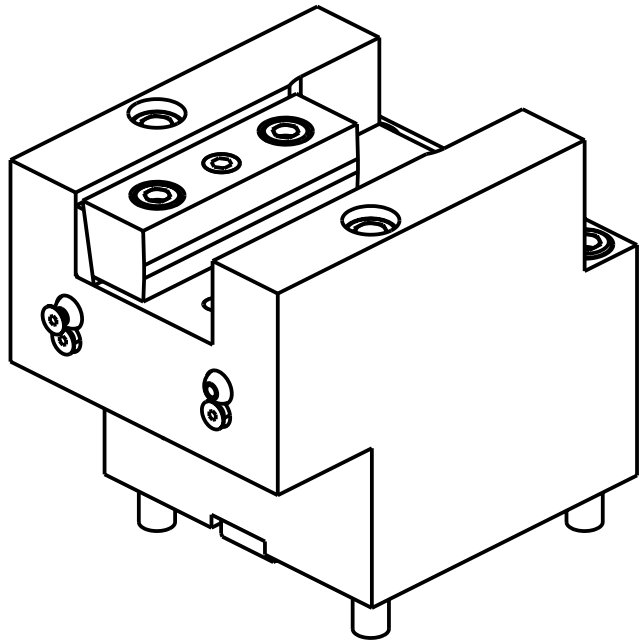

Cod. MT	N°Utensili N°Tools N°Werkzeuge	Reversibile lato mandrino/contromandrino Reversible sub/main spindle side Umkehrbare Spindelseite/ Gegenspindelseite	Misure Dimensions Masse	B	H
DW03753200	1	X	mm	32	32

SMEC (SAMSUNG)

MOD: SL60/65 MC - PL60/65/70/80 MC - SLV1000M - SL6500/8500M

PORTAUTENSILE ASSIALE SINGOLO QD=32mm
Axial single static tool QD=32mm
Axial Single-Werkzeughalter QD=32mm

M.T. srl
Via Casino Albini 480
Tel. 0541/956034-957884
Fax 0541/956341
47842 S. GIOVANNI IN M. (RN)
e-mail: mtma@mtmarchetti.com
http://www.mtmarchetti.com

SMG554-3-10

Subject to change without notice.

03/2024