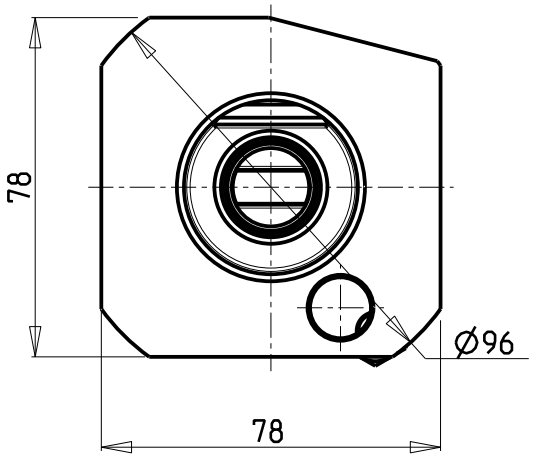

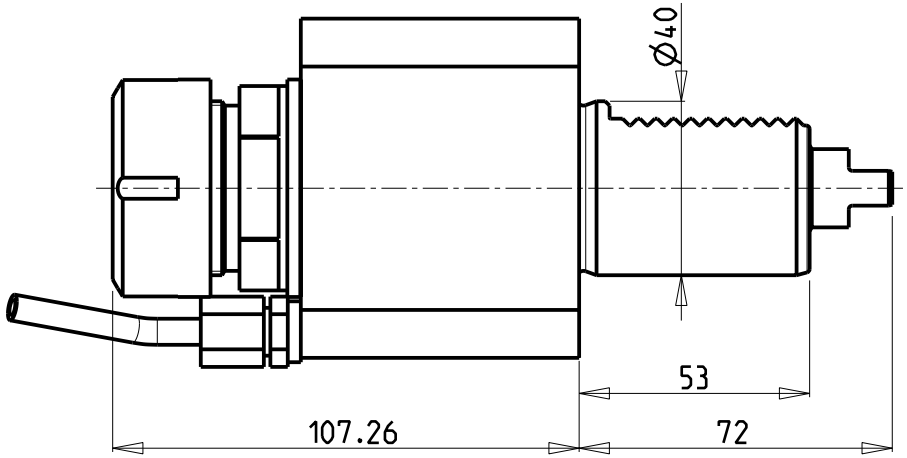

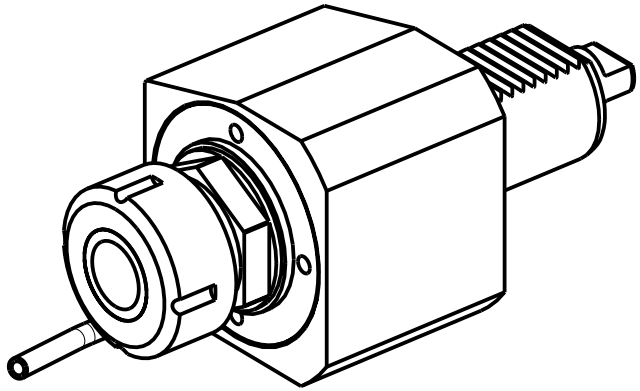

Cod. MT	Mandrino Spindle Spindel	I	RPM	Coppia Max Max Torque Max Drehmoment	Lubrificazione est. Ext. coolant Aussenkuehlung	CHIAVI NON INCLUSE Keys not included Schluessel nicht einbegriffen	
223TAK_R32_40A00	ER32	1:1	4000	70Nm	X	CHUB41	CHSTER32

TAKAMAZ
VDI 40

MODULO MOTORIZZATO RADIALE VDI40
Radial driven tool VDI40
Radial angetriebenes Werkzeug VDI40

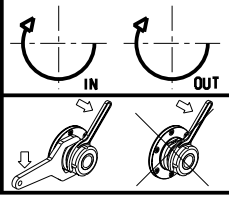

M.T. srl
Via Casino Albini 480
Tel. 0541/956034-957884
Fax 0541/956341
47842 S. GIOVANNI IN M. (RN)
e-mail: mtma@mtmarchetti.com
http://www.mtmarchetti.com

TAK010-1-00

Subject to change without notice.

09/2024