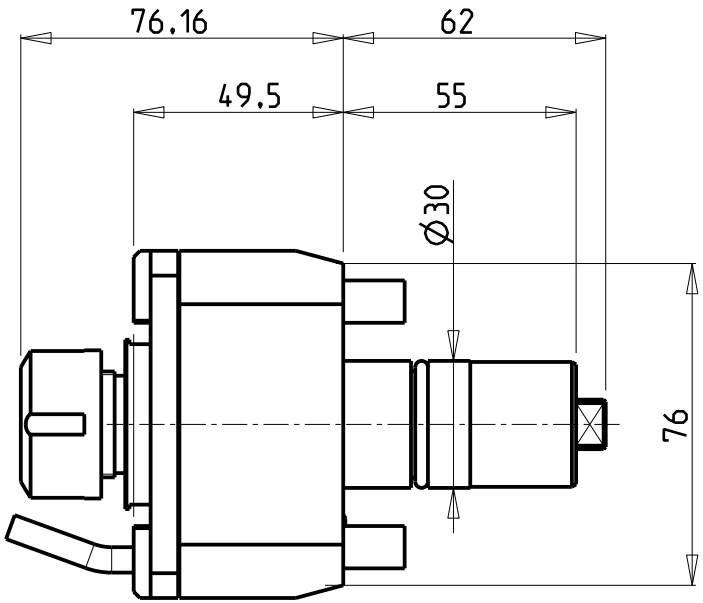

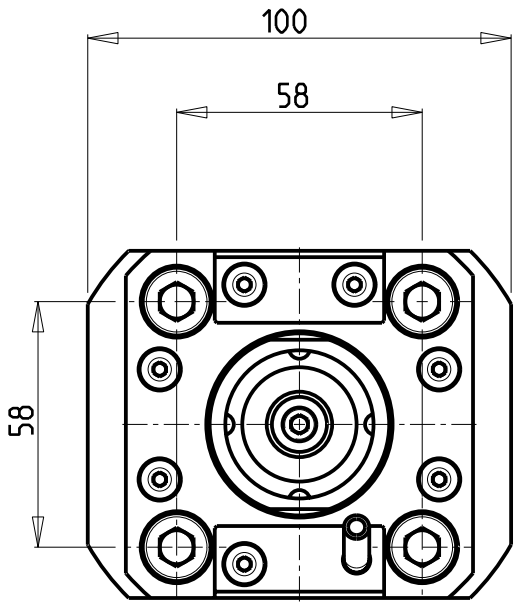

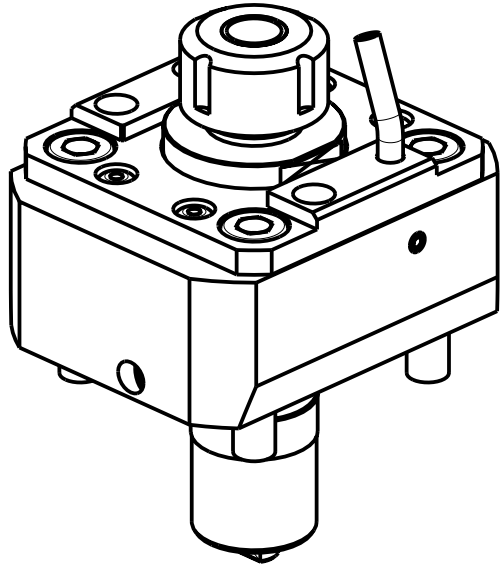

• Chiave inclusa
• Key included
• Schluessel inbegriffen

Cod. MT	Mandrino Spindle Spindel	I	RPM	Coppia Max Max Torque Max Drehmoment	Lubrificazione est. Ext. coolant Aussenkuehlung	CHIAVI NON INCLUSE Keys not included Schluessel nicht einbegriffen	
TKM0020120	ER20	1:1	4000	40Nm	X	OKU0290009 •	CHSTER20

TAKAMAZ
XY120 PLUS

MODULO MOTORIZZATO RADIALE
Radial driven tool
Radial angetriebenes Werkzeug

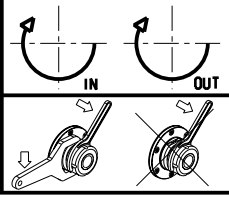

M.T. srl
Via Casino Albini 480
Tel. 0541/956034-957884
Fax 0541/956341
47842 S. GIOVANNI IN M. (RN)
e-mail: mtma@mtmarchetti.com
http://www.mtmarchetti.com

TAK010-2-00

Subject to change without notice.

09/2024