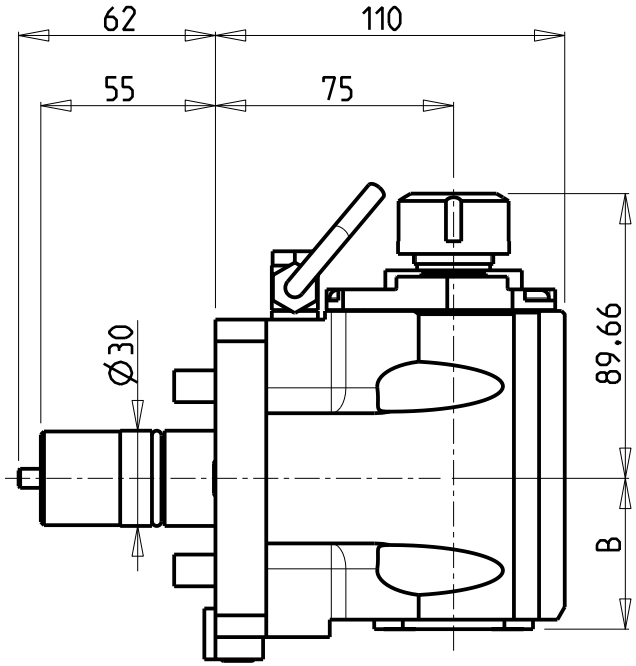

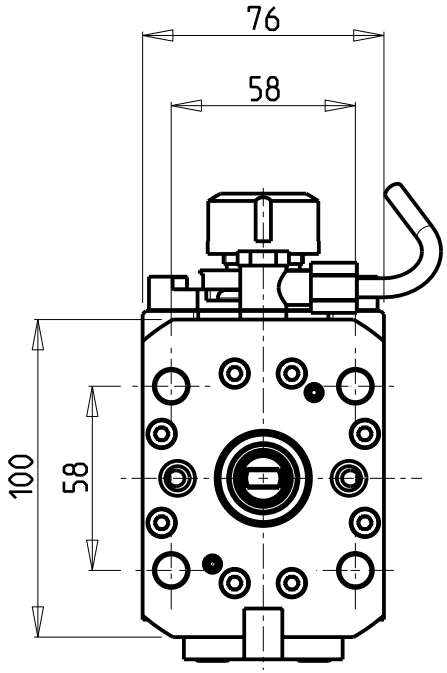

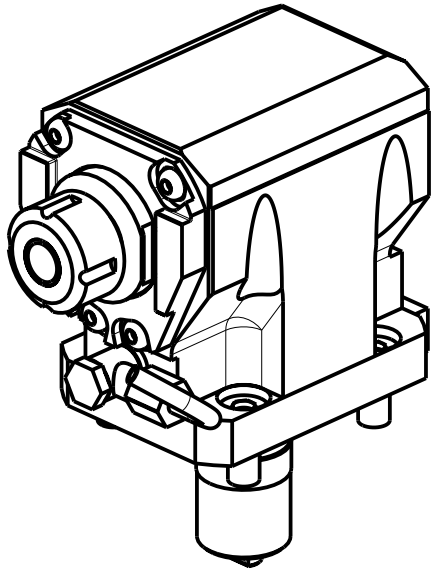

• Chiave inclusa
• Key included
• Schluessel inbegriffen

Cod. MT	Mandrino Spindle Spindel	I	RPM	Coppia Max Max Torque Max Drehmoment	Reversibile lato mandrino/contromandrino Reversible sub/main spindle side Umkehrbare Spindelseite/ Gegenspindelseite	Lubrificazione int. Coolant through Innenkuehlung	Lubrificazione est. Ext. coolant Aussenkuehlung	B	CHIAVI NON INCLUSE Keys not included Schluessel nicht einbegriffen	
TKM0010120	ER20	1:1	4000	40Nm	X	-	X	47.5	CHSTER20	OKU0290009 •
TKM0010220	ER20	1:1	4000	40Nm	X	P=70bar	X	58.5	CHSTER20	OKU0290009 •

TAKAMAZ

XY120 PLUS

MODULO MOTORIZZATO ASSIALE

Axial driven tool

Axial angetriebenes Werkzeug

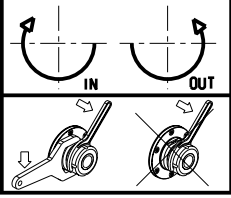

M.T. srl
Via Casino Albini 480
Tel. 0541/956034-957884
Fax 0541/956341
47842 S. GIOVANNI IN M. (RN)
e-mail: mtma@mtmarchetti.com
http://www.mtmarchetti.com

TAK150-2-10

Subject to change without notice.

09/2024