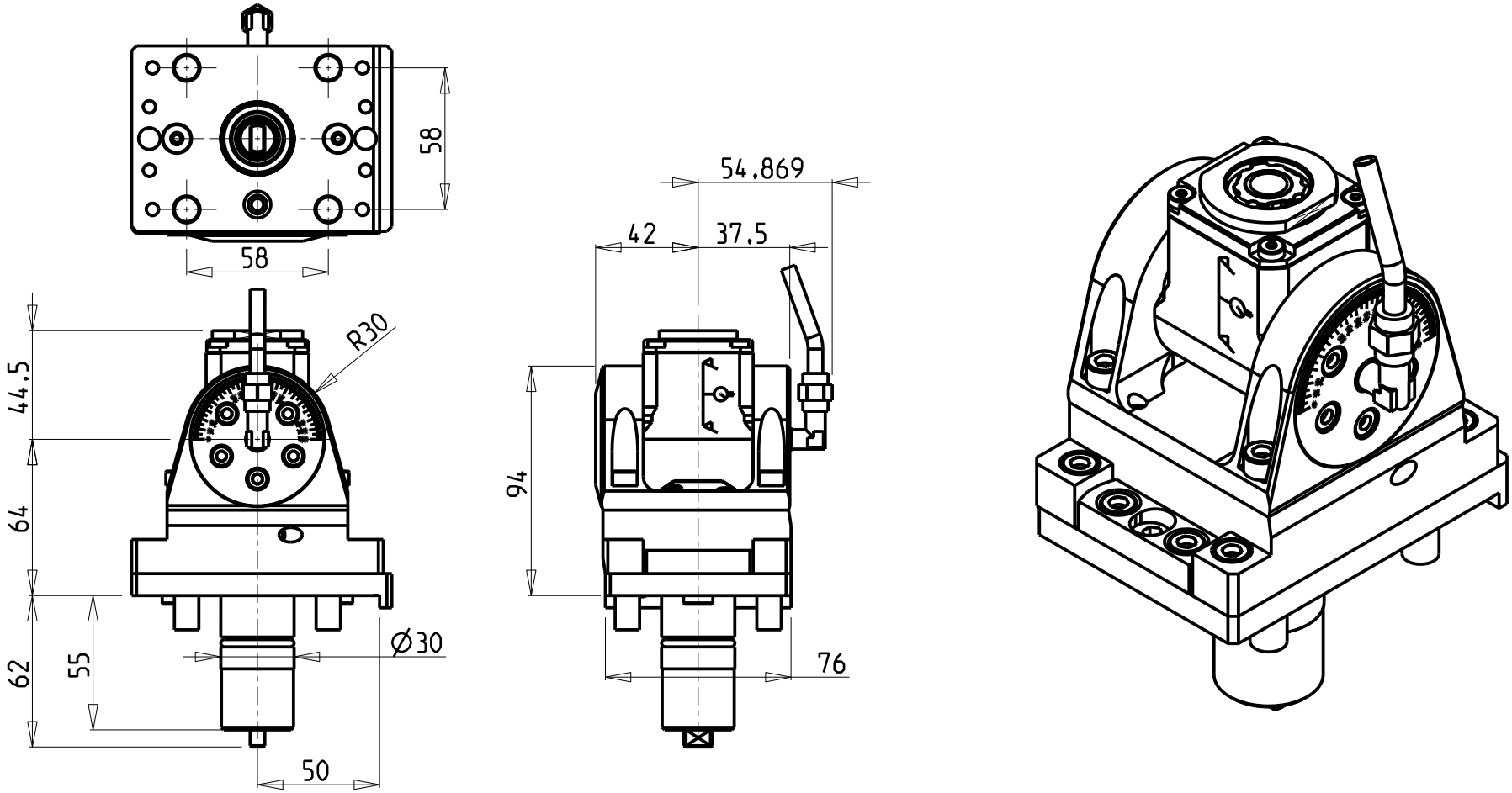

Cod. MT	Mandrino Spindle Spindel	I	RPM	Coppia Max Max Torque Max Drehmoment	Reversibile lato mandrino/contromandrino Reversible sub/main spindle side Umkehrbare Spindelseite/ Gegenspindelseite	Lubrificazione int. Coolant through Innenkuehlung	Lubrificazione est. Ext. coolant Aussenkuehlung	CHIAVI INCLUSE Keys included Schluessel inbegriffen			
TKM0030116	ERA16	1:1	6000	20Nm	X	-	X	CHUB19_SP3	CHUB32	CHESL05	CHTAER16ZC
TKM0030216	ERA16	1:1	6000	20Nm	X	P=70bar	X	CHUB19_SP3	CHUB32	CHESL05	CHTAER16ZC

TAKAMAZ

XY120 PLUS

MODULO MOTORIZZATO ORIENTABILE ±90°

±90° adjustable angle driven tool

Angetriebenes Werkzeug schwenkbar ±90°

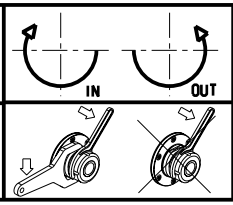

M.T. srl
Via Casino Albini 480
Tel. 0541/956034-957884
Fax 0541/956341
47842 S. GIOVANNI IN M. (RN)
e-mail: mtma@mtmarchetti.com
http://www.mtmarchetti.com

TAK335-2-00

Subject to change without notice.

09/2024