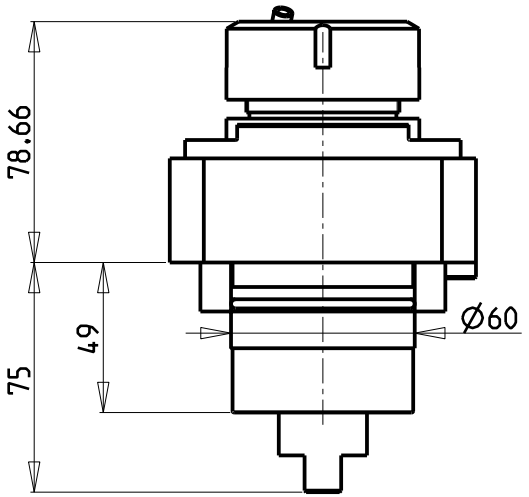

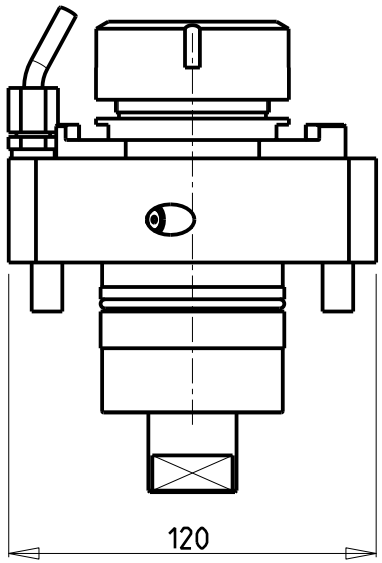

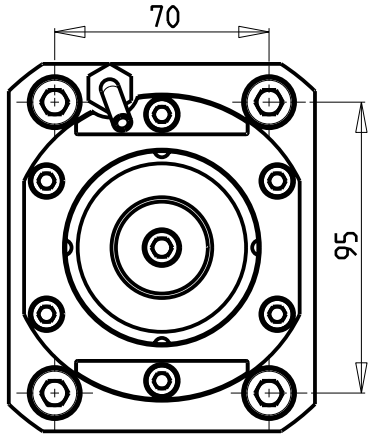

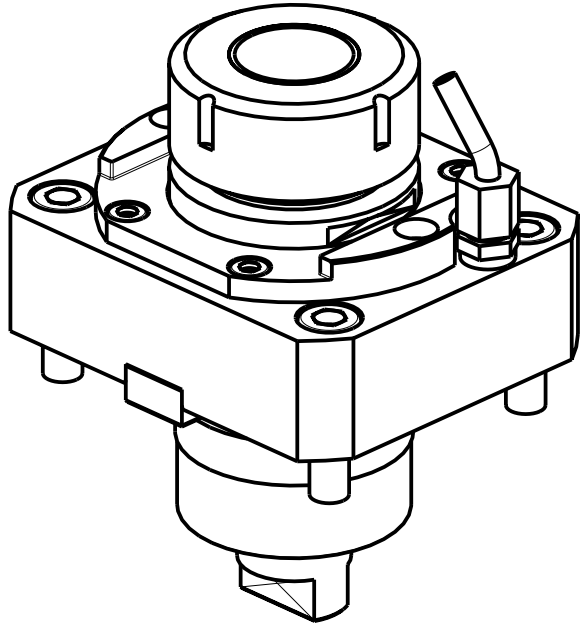

Cod. MT	Mandrino Spindle Spindel	I	RPM	Coppia Max Max Torque Max Drehmoment	Lubrificazione est. Ext. coolant Aussenkuehlung	CHIAVI NON INCLUSE Keys not included Schluessel nicht einbegriffen	
TKW 0170140	ER40	1:1	3500	90Nm	X	CHSTER40	OKU0430007 •

• Chiave inclusa
• Key included
• Schluessel inbegriffen

TAKISAWA

MOD: NEX315/715 - LS800M - VTL750/760M - LA350/450M - LA250YS 12ST. - NX2500 12ST.

MODULO MOTORIZZATO RADIALE
Radial driven tool
Radial angetriebenes Werkzeug

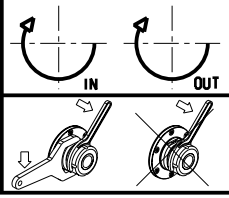

M.T. srl
Via Casino Albini 480
Tel. 0541/956034-957884
Fax 0541/956341
47842 S. GIOVANNI IN M. (RN)
e-mail: mtma@mtmarchetti.com
http://www.mtmarchetti.com

TKW 010-4-00

Subject to change without notice.

03/2024