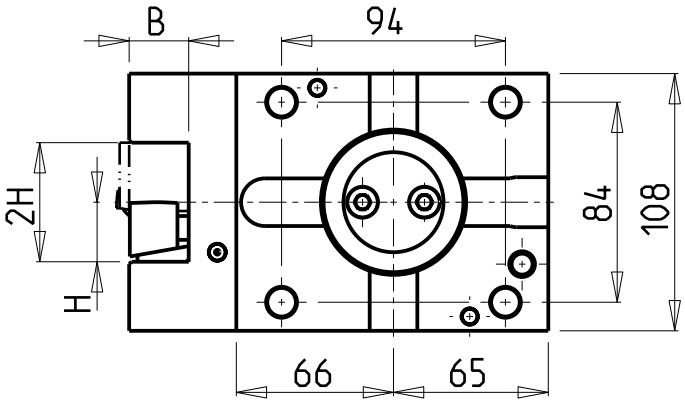

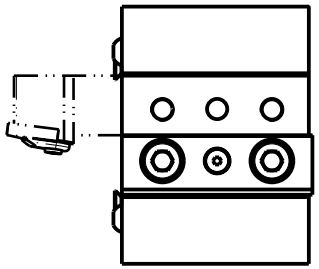

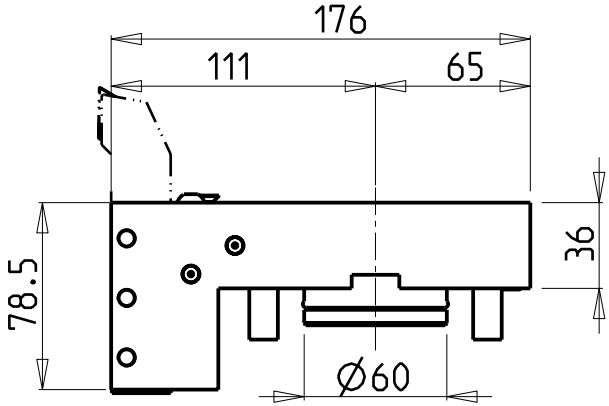

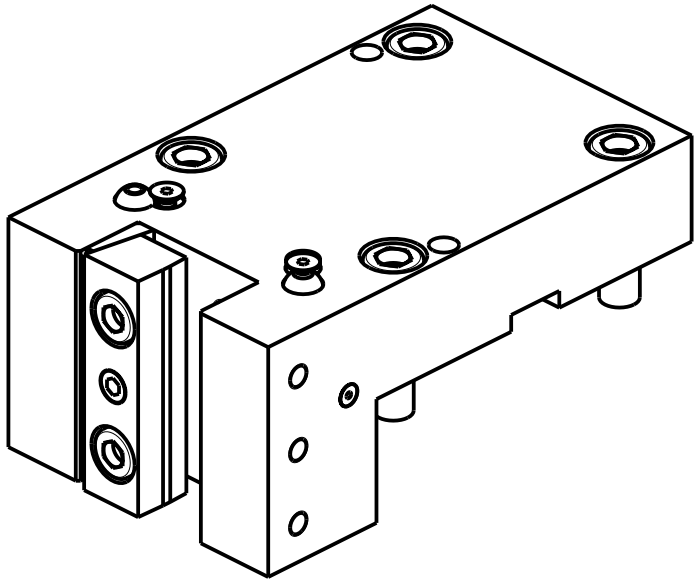

Cod. MT	N°Utensili N°Tools N°Werkzeuge	Misure Dimensions Masse	B	H
MNL0382500	1/2	mm	25	25
MNL0382540	1/2	Inch	1"	1"
MNL0382000	1/2	mm	20	20
MNL0381905	1/2	Inch	3/4"	3/4"

TAKISAWA

MOD: TS3000/4000/5000 Y/YS 12 ST. (3 KEYS TURRET)

PORTAUTENSILE RADIALE SINGOLO ARRETRATO QD=25mm / QD=1" / QD=20mm / QD=3/4"
Radial rear-set single static tool QD=25mm / QD=1" / QD=20mm / QD=3/4"
Radial Single-Werkzeughalter zurueckversetzt QD=25mm / QD=1" / QD=20mm / QD=3/4"

M.T. srl
Via Casino Albini 480
Tel. 0541/956034-957884
Fax 0541/956341
47842 S. GIOVANNI IN M. (RN)
e-mail: mtma@mtmarchetti.com
http://www.mtmarchetti.com

TKW 433-7-00

Subject to change without notice.

03/2024