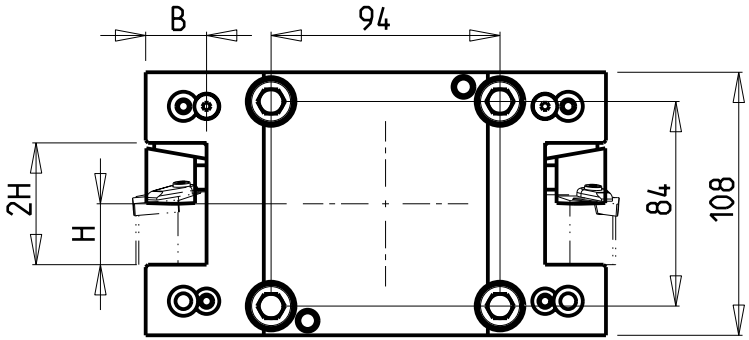

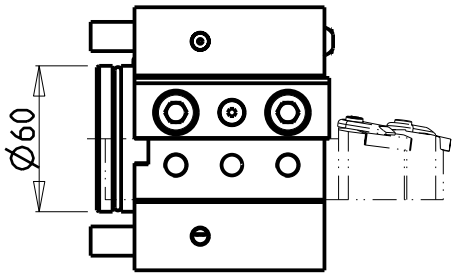

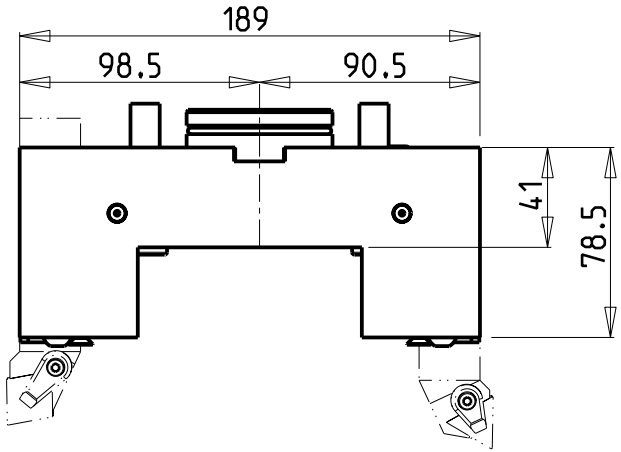

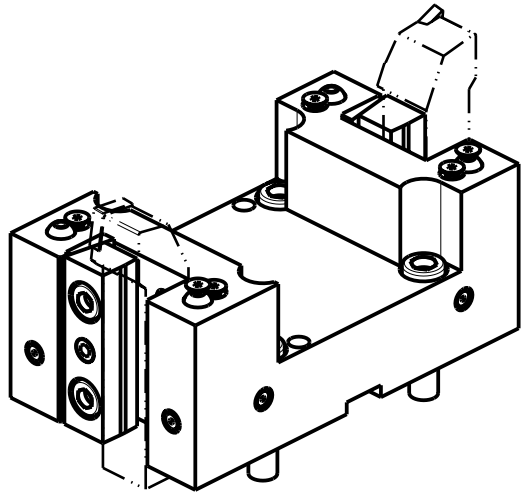

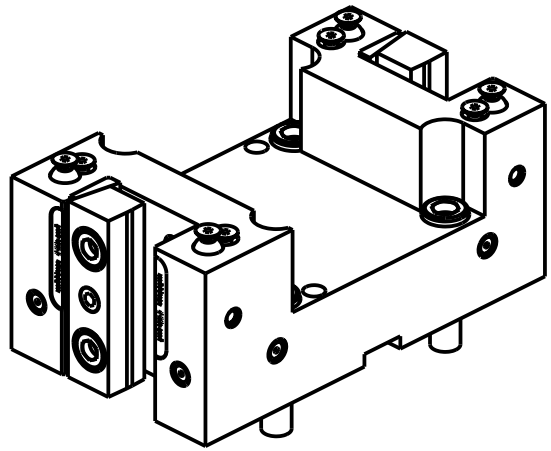

MNL0052510

Cod. MT	Cod. MORI-SEIKI	N°Utensili N°Tools N°Werkzeuge	Reversibile lato mandrino/contromandrino Reversible sub/main spindle side Umkehrbare Spindelseite/ Gegenspindelseite	Lubrificazione int. Coolant through Innenkuehlung	Lubrificazione est. Ext. coolant Aussenkuehlung	Misure Dimensions Masse	B	H
MNL0052500	T00184	2/4	X	-	X	mm	25	25
MNL0052510	-	2/4	X	P=70bar	X	mm	25	25
MNL0052540	T00199	2/4	X	-	X	Inch	1"	1"
MNL0052000	T00185	2/4	X	-	X	mm	20	20
MNL0051905	T00201	2/4	X	-	X	Inch	3/4"	3/4"

TAKISAWA

MOD: TS3000/4000/5000 Y/YS 12 ST. (3 KEYS TURRET)

PORTAUTENSILE RADIALE DOPPIO QD=25mm / QD=1" / QD=20mm / QD=3/4"
Radial double static tool QD=25mm / QD=1" / QD=20mm / QD=3/4"
Radial Doppel-Werkzeughalter QD=25mm / QD=1" / QD=20mm / QD=3/4"

M.T. srl
Via Casino Albini 480
Tel. 0541/956034-957884
Fax 0541/956341
47842 S. GIOVANNI IN M. (RN)
e-mail: mtma@mtmarchetti.com
http://www.mtmarchetti.com

TKW 453-7-00

Subject to change without notice.