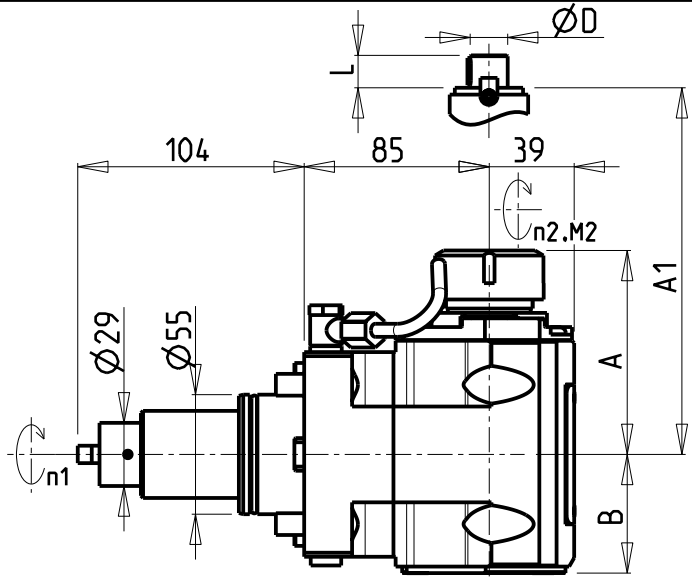

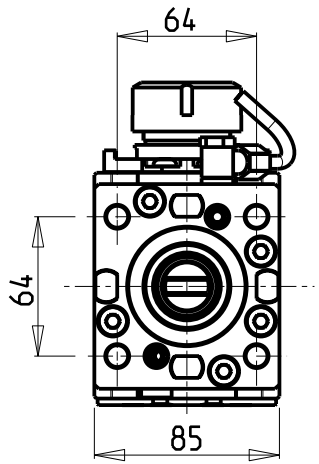

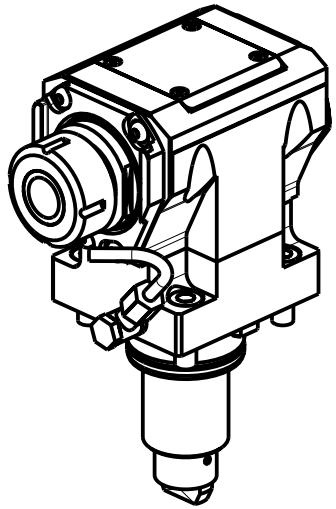

ATTENZIONE - ATTENTION - ACHTUNG

- VERIFICARE LE MISURE DI INGOMBRO PER POSSIBILE INTERFERENZA SU ALCUNI MODELLI DI MACCHINE
- Please check the overall sizes for possible interferences on some machine models
- Bitte überprüfen sie das ausmass um mögliche interferenzen auf einigen maschinen modellen zu vermeiden

• Chiave inclusa
• Key included
• Schluessel inbegriffen

Cod. MT	Mandrino Spindle Spindel	I (n1:n2)	RPM max n2	Coppia Max Max Torque Max Drehmoment M2 [Nm]	Reversibile lato mandrino/contromandrino Reversible sub/main spindle side Umkehrbare Spindelseite/ Gegenspindelseite	Lubrificazione int. Coolant through Innenkuehlung Pmax [bar]	Lubr. esterna Ext. coolant Aussenkuehlung	A	A1	B	D	L	CHIAVI NON INCLUSE Keys not included Schluessel nicht einbegriffen		
DW00890125	ER25	1:1	6000	50	X	-	X	91.16	-	54.5	-	-	-	CHSTER25	OKU0650004 •
DW00890225	ER25	1:1	6000	50	X	70	X	91.16	-	65.5	-	-	-	CHSTER25	OKU0650004 •
DW00890132	ER32	1:1	6000	50	X	-	X	93.66	-	54.5	-	-	-	CHSTER32	OKU0650004 •
DW00890232	ER32	1:1	6000	50	X	70	X	93.66	-	65.5	-	-	-	CHSTER32	OKU0650004 •
DW00890140	ER40	1:1	6000	50	X	-	X	98.16	-	54.5	-	-	-	CHSTER40	OKU0650004 •
DW00890240	ER40	1:1	6000	50	X	70	X	98.16	-	65.5	-	-	-	CHSTER40	OKU0650004 •
DW00890325	ERA25	1:1	6000	50	X	-	X	65	-	54.5	-	-	CHUB27	CHTAER25ZC •	OKU0650004 •
DW00890425	ERA25	1:1	6000	50	X	70	X	65	-	65.5	-	-	CHUB27	CHTAER25ZC •	OKU0650004 •
DW00890516	Ø16x17	1:1	6000	50	X	-	X	-	67.5	54.5	16	17	-	CH_VTCROCE_M08 •	OKU0650004 •
DW00890522	Ø22x19	1:1	6000	50	X	-	X	-	67.5	54.5	22	19	-	CH_VTCROCE_M10 •	OKU0650004 •
DW00890527	Ø27x21	1:1	6000	50	X	-	X	-	70	54.5	27	21	-	CH_VTCROCE_M12 •	OKU0650004 •

VICTOR

MOD: VTURN-A16/A20/A200 CM/SCM/YCM/YSCM

MODULO MOTORIZZATO ASSIALE H=85mm
Axial driven tool H=85mm
Axial angetriebenes Werkzeug H=85mm

M.T. srl
Via Casino Albini 480
Tel. 0541/956034-957884
Fax 0541/956341
47842 S. GIOVANNI IN M. (RN)
e-mail: mtma@mtmarchetti.com
http://www.mtmarchetti.com

VCT150-1-31

Subject to change without notice.

03/2025