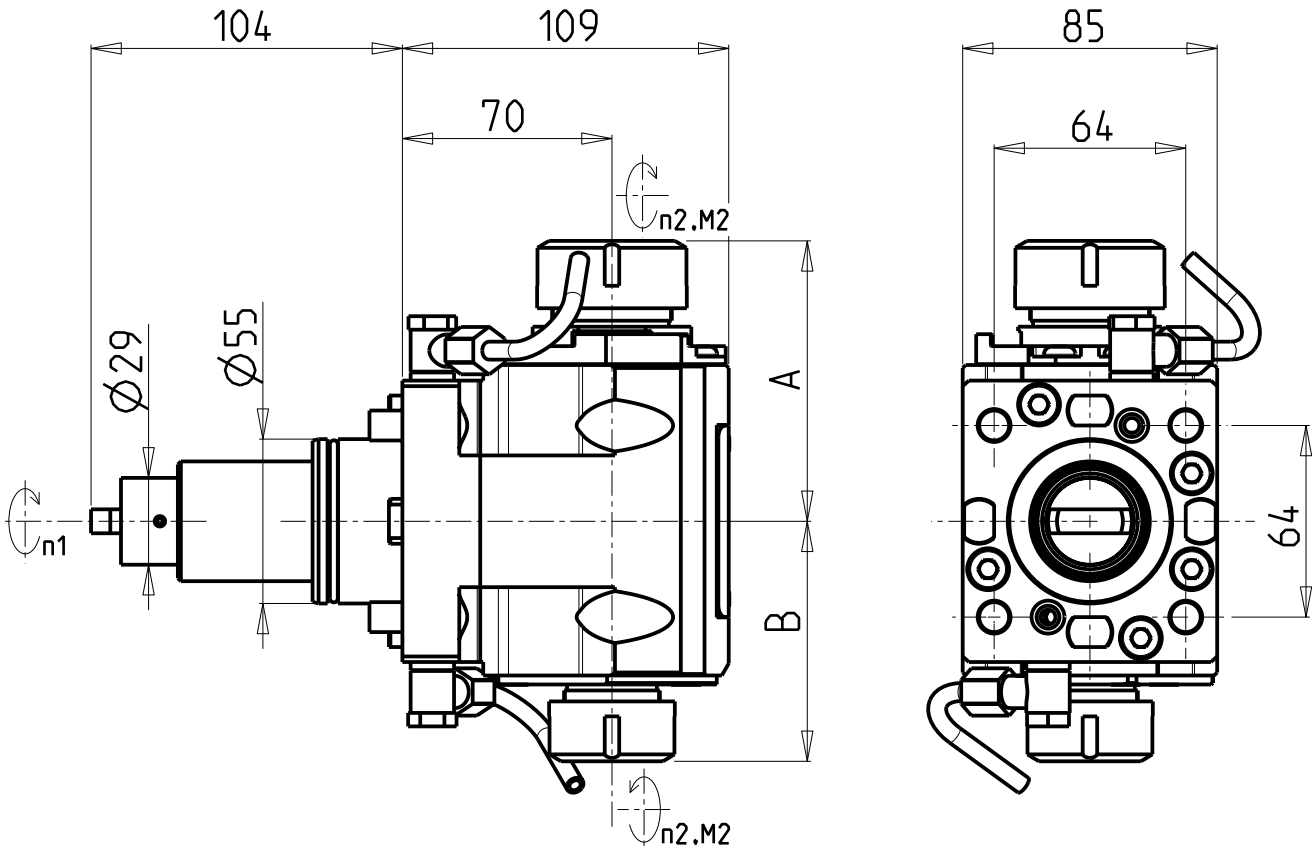


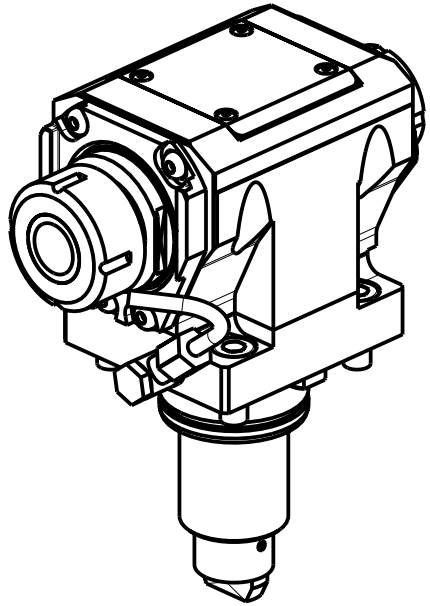

**ATTENZIONE - ATTENTION - ACHTUNG**

- Per lo smontaggio degli utensili utilizzare sempre la chiave di contrasto come indicato nel manuale d'uso.
- For disassembly of the tools use always the contrast key as mentioned in the user instructions.
- Fuer das Abmontieren der Werkzeuge immer den Gegenschluessel benutzen wie in der Bedienungsanleitung erwaehnt.

- Chiave inclusa
- Key included
- Schluessel inbegriffen

| Cod. MT | Mandrino Spindle Spindel | I (n1:n2) | RPM max n2 | Coppia Max Max Torque Max Drehmoment M2 [Nm] | Reversibile lato mandrino/contromandrino Reversible sub/main spindle side Umkehrbare Spindelseite/ Gegenspindelseite | Lubrificazione est. Ext. coolant Aussenkuehlung | A | B | CHIAVI NON INCLUSE Keys not included Schluessel nicht einbegriffen | | | | |
|---|---|---|---|---|---|---|---|---|---|---|---|---|---|
| DW01713225 | ER32+ER25 | 1:1 | 6000 | 50 | X | X | 93.66 | 80.16 | CHSTER32 | CHSTER25 | OKU0650004 • | - | - |
| DW01712520 | ERA25+ERA20 | 1:1 | 6000 | 50 | X | X | 65 | 55.5 | CHUB22 | CHUB27 | OKU0650004 • | CHTAER20ZC • | CHTAER25ZC • |

YCM

NT2000 16 STAZIONI - NTC1600/2000 M/LM/LS/Y/LY/LSY

MODULO MOTORIZZATO ASSIALE BISPORGENTE H=70mm
Axial opposite face twin driven tool H=70mm
Axial angetriebenes Werkzeug halb vorspringend H=70mm

**M.T. srl**
Via Casino Albini 480
Tel. 0541/956034-957884
Fax 0541/956341
47842 S. GIOVANNI IN M. (RN)
e-mail: mtma@mtmarchetti.com
http://www.mtmarchetti.com

YCM240-1-21

Subject to change without notice.

03/2025